# Service Manual

## SR5500 /L1G/N1G /N1B/U1B /N1S

## AV Surround Receiver

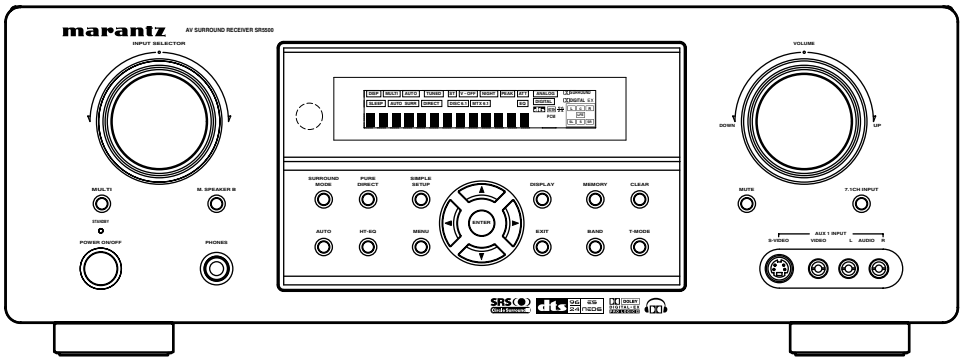

SR5500

### TABLE OF CONTENTS


| SECTION | PAGE |
|---|---|
| 1. TECHNICAL SPECIFICATIONS | 1 |
| 2. TECHNICAL DESCRIPTION | 3 |
| 3. POWER AMPLIFIER ADJUSTMENT | 5 |
| 4. SERVICE MODE | 6 |
| 5. SYSTEM ERROR | 8 |
| 6. UPDATE FIRMWARE | 9 |
| 7. WIRING DIAGRAM | 15 |
| 8. BLOCK DIAGRAM | 16 |
| 9. SCHEMATIC DIAGRAM | 17 |
| 10. PARTS LOCATION | 26 |
| 11. IC DATA | 33 |
| 12. EXPLODED VIEW AND PARTS LIST | 46 |
| 13. ELECTRICAL PARTS LIST | 50 |


Please use this service manual with referring to the user guide (D.F.U) without fail.
修理の際は、必ず取扱説明書を準備し操作方法を確認の上作業を行ってください。

marantz®

# SR5500


Part no. 90M08BW855010
First Issue 2004.07
ecm

## MARANTZ DESIGN AND SERVICE

Using superior design and selected high grade components, **MARANTZ** company has created the ultimate in stereo sound. Only original **MARANTZ** parts can insure that your **MARANTZ** product will continue to perform to the specifications for which it is famous.
Parts for your **MARANTZ** equipment are generally available to our National Marantz Subsidiary or Agent.

### ORDERING PARTS :

Parts can be ordered either by mail or by Fax.. In both cases, the correct part number has to be specified.
The following information must be supplied to eliminate delays in processing your order :

1. Complete address
2. Complete part numbers and quantities required
3. Description of parts
4. Model number for which part is required
5. Way of shipment
6. Signature : any order form or Fax. must be signed, otherwise such part order will be considered as null and void.

**USA**
**MARANTZ AMERICA, INC**
1100 MAPLEWOOD DRIVE
ITASCA, IL. 60143
USA
PHONE : 630 - 741 - 0300
FAX : 630 - 741 - 0301

**EUROPE / TRADING**
**MARANTZ EUROPE B.V.**
P. O. BOX 8744, BUILDING SILVERPOINT
BEEMDSTRAAT 11, 5653 MA EINDHOVEN
THE NETHERLANDS
PHONE : +31 - 40 - 2507844
FAX : +31 - 40 - 2507860

**CANADA**
**MARANTZ CANADA INC.**
5-505 APPLE CREEK BLVD.
MARKHAM, ONTARIO L3R 5B1
CANADA
PHONE : 905 - 415 - 9292
FAX : 905 - 475 - 4159

***PROFESSIONAL*** **AMERICAS**
**SUPERSCOPE TECHNOLOGIES, INC.**
MARANTZ PROFESSIONAL PRODUCTS
2640 WHITE OAK CIRCLE, SUITE A
AURORA, ILLINOIS 60504 USA
PHONE : 630 - 820 - 4800
FAX : 630 - 820 - 8103

***PROFESSIONAL*** **AUSTRALIA**
**TECHNICAL AUDIO GROUP PTY, LTD**
43-53 Bridge Rd.,
STANMORE NSW 2048
AUSTRALIA
PHONE : +61 - (0)2 - 9519 - 0900
FAX : +61 - (0)2 - 9519 - 0600

***PROFESSIONAL*** **HONG KONG**
**Jolly ProAudio Broadcast Engineering Ltd.**
UNIT 2, 10F, WAH HUNG CENTRE,
41 HUNG TO ROAD, KWUN TONG, KLN.,
HONG KONG
PHONE : 852 - 21913660
FAX : 852 - 21913990

**AUSTRALIA**
**QualiFi Pty Ltd,**
24 LIONEL ROAD,
MT. WAVERLEY VIC 3149
AUSTRALIA
PHONE : +61 - (0)3 - 9543 - 1522
FAX : +61 - (0)3 - 9543 - 3677

**THAILAND**
**MRZ STANDARD CO., LTD**
746 - 754 MAHACHAI ROAD.,
WANGBURAPAPIROM, PHRANAKORN,
BANGKOK, 10200 THAILAND
PHONE : +66 - 2 - 222 9181
FAX : +66 - 2 - 224 6795

**SINGAPORE**
**WO KEE HONG DISTRIBUTION PTE LTD**
No.1 JALAN KILANG TIMOR
#08-03 PACIFIC TECH CENTRE
SINGAPORE 159303
PHONE : +65 6376 0338
FAX : +65 6376 0166

**NEW ZEALAND**
**WILDASH AUDIO SYSTEMS NZ**
14 MALVERN ROAD MT ALBERT
AUCKLAND NEW ZEALAND
PHONE : +64 - 9 - 8451958
FAX : +64 - 9 - 8463554

**TAIWAN**
**PAI- YUING CO., LTD.**
6 TH FL NO, 148 SUNG KIANG ROAD,
TAIPEI, 10429, TAIWAN R.O.C.
PHONE : +886 - 2 - 25221304
FAX : +886 - 2 - 25630415

**MALAYSIA**
**WO KEE HONG ELECTRONICS SDN. BHD.**
2ND FLOOR BANGUNAN INFINITE CENTRE
LOT 1, JALAN 13/6, 46200 PETALING JAYA
SELANGOR DARUL EHSAN, MALAYSIA
PHONE : +60 - 3 - 7954 8088
FAX : +60 - 3 - 7954 7088

**JAPAN** *Technical*
**MARANTZ JAPAN, INC.**
35- 1, 7- CHOME, SAGAMIONO
SAGAMIHARA - SHI, KANAGAWA
JAPAN 228-8505
PHONE : +81 42 748 1013
FAX : +81 42 741 9190

日本マランツ株式会社

本　社　〒228-8505
神奈川県相模原市相模大野7-35-1

**KOREA**
**MK ENTERPRISES LTD.**
ROOM 604/605, ELECTRO-OFFICETEL, 16-58,
3GA, HANGANG-RO, YONGSAN-KU, SEOUL
KOREA
PHONE : +822 - 3232 - 155
FAX : +822 - 3232 - 154

### SHOCK, FIRE HAZARD SERVICE TEST :

**CAUTION :** After servicing this appliance and prior to returning to customer, measure the resistance between either primary AC cord connector pins ( with unit NOT connected to AC mains and its Power switch ON ), and the face or Front Panel of product and controls and chassis bottom.
Any resistance measurement less than 1 Megohms should cause unit to be repaired or corrected before AC power is applied, and verified before it is return to the user/customer.
Ref. UL Standard No. 6500.

In case of difficulties, do not hesitate to contact the Technical Department at above mentioned address.

# 1. TECHNICAL SPECIFICATIONS

**FM TUNER SECTION**

Frequency Range ..... 87.5 - 108.0 MHz
Usable Sensitivity ..... IHF 1.8 µV/16.4 dBf
Signal to Noise Ratio ..... Mono/Stereo 75/70 dB
Distortion ..... Mono/Stereo 0.2/0.3 %
Stereo Separation ..... 1 kHz 45 dB
Alternate Channel Selectivity ..... ± 300 kHz 60 dB
Image Rejection ..... 98 MHz 70 dB
Tuner Output Level ..... 1 kHz, ± 75 kHz Dev 800 mV

**AM TUNER SECTION**

Frequency Range ..... 531 - 1602 kHz [/K/N]
..... 520 - 1710 kHz [/L/U]
Signal to Noise Ratio ..... 50 dB
Usable Sensitivity ..... Loop 400mV/m
Distortion ..... 400Hz, 30 % Mod. 0.5 %
Selectivity ..... ± 18 kHz 70 dB

**AUDIO SECTION**

Power Output (20 Hz - 20 kHz/THD=0.08%)
Front L&R ..... 8 ohms 90 W / Ch
Center ..... 8 ohms 90 W / Ch
Surround L&R ..... 8 ohms 90 W / Ch
Surround Back L&R ..... 8 ohms 90 W / Ch

Front L&R ..... 6 ohms 110 W / Ch
Center ..... 6 ohms 110 W / Ch
Surround L&R ..... 6 ohms 110 W / Ch
Surround Back L&R ..... 6 ohms 110 W / Ch

Input Sensitivity/Impedance ..... 168 mV/ 47 Kohms
Signal to Noise Ratio
(Analog Input / Source Direct) ..... 105 dB
Frequency Response
(Analog Input / Source Direct) ... 8 Hz - 100 kHz (± 3 dB)
(Digital Input / 96 kHz PCM) ..... 8 Hz - 45 kHz (± 3 dB)

**VIDEO**

Television Format ..... NTSC/PAL
Input Level/Impedance ..... 1 Vp-p/75 ohms
Output Level/Impedance ..... 1 Vp-p/75 ohms
Video Frequency Response ..... 5 Hz to 8 MHz (– 1 dB)
Video Frequency (Component) .... 5 Hz to 80 MHz (– 1 dB)
S/N ..... 60 dB

**GENERAL**

Power Requirement ..... AC 240 V 50 /60Hz [/A]
..... AC 220 V 50 Hz [/K]
..... AC 110 V 60 Hz [/L]
..... AC 230 V 50 Hz [/N]
..... AC 120 V 60 Hz [/U]
Power Consumption ..... 470 W
Weight ..... 13.0 Kg

**ACCESSORIES**

Remote Control Unit RC5500SR ..... 1
AAA-size batteries ..... 2
FM Antenna ..... 1
AM Loop Antenna ..... 1
Front AUX Jack Cover ..... 1
AC Power Cord ..... 1

**The relation between the selected surround mode and the input signal**

The surround mode is selected with the surround mode selector on SR5500 or the remote control unit. However, the sound you hear is subject to the relationship between the selected surround mode and input signal. That relationship is as follows;

**SR5500**

| Surround Mode | Input Signal | Decoding | Output Channel | | | | | Front information display | |
|---|---|---|---|---|---|---|---|---|---|
| | | | L/R | C | SL SR | SBL SBR | SubW | Signal format indicators | Channel status |
| AUTO | Dolby Surr. EX | Dolby Digital EX | O | O | O | O | O | DIGITAL | L, C, R, SL, SR, S, LFE |
| | Dolby D (5.1ch) | Dolby Digital 5.1 | O | O | O | - | O | DIGITAL | L, C, R, SL, SR, LFE |
| | Dolby D(2ch) | Dolby Digital 2.0 | O | - | - | - | - | DIGITAL | L, R |
| | Dolby D (2ch Surr) | Pro Logic IIx movie | O | O | O | O | - | DIGITAL , SURROUND | L, R, S |
| | DTS-ES | DTS-ES | O | O | O | O | O | dts, ES | L, C, R, SL, SR, S, LFE |
| | DTS 96/24 | DTS 96/24 | O | O | O | - | O | dts 96/24 | L, C, R, SL, SR, LFE |
| | DTS (5.1ch) | DTS 5.1 | O | O | O | - | O | dts | L, C, R, SL, SR, LFE |
| | PCM(Audio) | PCM (Stereo) | O | - | - | - | - | PCM | L, R |
| | PCM 96kHz | PCM (96kHz Stereo) | O | - | - | - | - | PCM | L, R |
| | Analog | Stereo | O | - | - | - | - | ANALOG | - |
| PURE DIRECT | Dolby D Surr. EX | Dolby Digital EX | O | O | O | O | O | DIGITAL | L, C, R, SL, SR, S, LFE |
| | Dolby D (5.1ch) | Dolby Digital 5.1 | O | O | O | - | O | DIGITAL | L, C, R, SL, SR, LFE |
| | Dolby D (2ch) | Dolby Digital 2.0 | O | - | - | - | - | DIGITAL | L, R |
| | Dolby D (2ch Surr) | Pro Logic IIx movie | O | O | O | O | - | DIGITAL , SURROUND | L, R, S |
| | DTS-ES | DTS-ES | O | O | O | O | O | dts, ES | L, C, R, SL, SR, S, LFE |
| | DTS 96/24 | DTS 96/24 | O | O | O | - | O | dts 96/24 | L, C, R, SL, SR, LFE |
| | DTS (5.1ch) | DTS 5.1 | O | O | O | - | O | dts | L, C, R, SL, SR, LFE |
| | PCM (Audio) | PCM (Stereo) | O | - | - | - | - | PCM | L, R |
| | PCM 96kHz | PCM (96kHz Stereo) | O | - | - | - | - | PCM | L, R |
| | Analog | Stereo | O | - | - | - | - | ANALOG | - |
| EX/ES | Dolby D Surr. EX | Dolby Digital EX | O | O | O | O | O | DIGITAL | L, C, R, SL, SR, S, LFE |
| | Dolby D (5.1ch) | Dolby Digital EX | O | O | O | O | O | DIGITAL | L, C, R, SL, SR, LFE |
| | DTS-ES | DTS-ES | O | O | O | O | O | dts , ES | L, C, R, SL, SR, S, LFE |
| | DTS(5.1ch) | DTS-ES | O | O | O | O | O | dts | L, C, R, SL, SR, LFE |
| DOLBY (PL IIx movie) (PL IIx music) (PL IIx game) (Pro Logic) | Dolby D Surr. EX | Dolby Digital 5.1 | O | O | O | O | O | DIGITAL | L, C, R, SL, SR, S, LFE |
| | Dolby D (5.1ch) | Dolby Digital 5.1 | O | O | O | O | O | DIGITAL | L, C, R, SL, SR, LFE |
| | Dolby D (2ch) | Pro Logic IIx | O | O | O | O | - | DIGITAL | L, R |
| | Dolby D (2ch Surr) | Pro Logic IIx | O | O | O | O | - | DIGITAL , SURROUND | L, R, S |
| | PCM (Audio) | Pro Logic IIx | O | O | O | O | - | PCM | L, R |
| | Analog | Pro Logic IIx | O | O | O | O | - | ANALOG | - |
| DTS (Neo:6 Cinema) (Neo:6 Music) | DTS-ES | DTS 5.1 | O | O | O | - | O | dts, ES | L, C, R, SL, SR, S, LFE |
| | DTS 96/24 | DTS 96/24 | O | O | O | - | O | dts 96/24 | L, C, R, SL, SR, LFE |
| | DTS (5.1ch) | DTS 5.1 | O | O | O | - | O | dts | L, C, R, SL, SR, LFE |
| | PCM (Audio) | Neo:6 | O | O | O | O | - | PCM | L, R |
| | Analog | Neo:6 | O | O | O | O | - | ANALOG | - |
| | Dolby D (2ch) | Neo:6 | O | O | O | O | - | DIGITAL | L, R |
| | Dolby D (2ch Surr) | Neo:6 | O | O | O | O | - | DIGITAL , SURROUND | L, R, S |
| CS II Cinema CS II Music CS II Mono | PCM (Audio) | CS II | O | O | O | O | O | PCM | L, R |
| | Analog | CS II | O | O | O | O | O | ANALOG | - |
| | Dolby D (2ch) | CS II | O | O | O | O | O | DIGITAL | L, R |
| | Dolby D (2ch Surr) | CS II | O | O | O | O | O | DIGITAL , SURROUND | L, R, S |
| STEREO | Dolby Surr. EX | Stereo | O | - | - | - | O | DIGITAL | L, C, R, SL, SR, S, LFE |
| | Dolby D (5.1ch) | Stereo | O | - | - | - | O | DIGITAL | L, C, R, SL, SR, LFE |
| | Dolby D (2ch) | Stereo | O | - | - | - | - | DIGITAL | L, R |
| | Dolby D (2ch Surr) | Stereo | O | - | - | - | - | DIGITAL , SURROUND | L, R, S |
| | DTS-ES | Stereo | O | - | - | - | O | dts, ES | L, C, R, SL, SR, S, LFE |
| | DTS 96/24 | Stereo | O | - | - | - | O | dts 96/24 | L, C, R, SL, SR, LFE |
| | DTS (5.1ch) | Stereo | O | - | - | - | O | dts | L, C, R, SL, SR, LFE |
| | PCM (Audio) | Stereo | O | - | - | - | - | PCM | L, R |
| | PCM 96kHz | Stereo | O | - | - | - | - | PCM | L, R |
| | Analog | Stereo | O | - | - | - | - | ANALOG | - |
| Virtual | Dolby Surr. EX | Virtual | O | - | - | - | - | DIGITAL | L, C, R, SL, SR, S, LFE |
| | Dolby D (5.1ch) | Virtual | O | - | - | - | - | DIGITAL | L, C, R, SL, SR, LFE |
| | Dolby D (2ch) | Virtual | O | - | - | - | - | DIGITAL | L, R |
| | Dolby D (2ch Surr) | Virtual | O | - | - | - | - | DIGITAL , SURROUND | L, R, S |
| | DTS-ES | Virtual | O | - | - | - | - | dts, ES | L, C, R, SL, SR, S, LFE |
| | DTS (5.1ch) | Virtual | O | - | - | - | - | dts | L, C, R, SL, SR, LFE |
| | PCM (Audio) | Virtual | O | - | - | - | - | PCM | L, R |
| | Analog | Virtual | O | - | - | - | - | ANALOG | - |
| Multi Ch. Stereo | Dolby Surr. EX | Dolby Digital EX | O | O | O | O | O | DIGITAL | L, C, R, SL, SR, S, LFE |
| | Dolby D (5.1ch) | Dolby Digital 5.1 | O | O | O | - | O | DIGITAL | L, C, R, SL, SR, LFE |
| | Dolby D (2ch) | Multi Channel Stereo | O | O | O | O | - | DIGITAL | L, R |
| | Dolby D (2ch Surr) | Multi Channel Stereo | O | O | O | O | - | DIGITAL , SURROUND | L, R, S |
| | DTS-ES | DTS-ES | O | O | O | O | O | dts, ES | L, C, R, SL, SR, S, LFE |
| | DTS (5.1ch) | DTS 5.1 | O | O | O | - | O | dts | L, C, R, SL, SR, LFE |
| | PCM (Audio) | Multi Channel Stereo | O | O | O | O | - | PCM | L, R |
| | Analog | Multi Channel Stereo | O | O | O | O | - | ANALOG | - |

***Notes:***

- Dolby Digital (2 ch: Lt/Rt): signal with Dolby Surround flag Speakers are full set.
- No sound outputs from the surround speaker, center speaker and subwoofer if the DVD disc has no surround data.

Abbreviations

L/R : Front speakers
C : Center speaker
SL/SR : Surround speakers
SBL/SBR : Surround Back speakers
SubW : Sub woofer speaker

## 2. TECHNICAL DESCRIPTION

DTS was introduced in 1994 to provide 5.1 channels of discrete digital audio into home theater systems.
DTS brings you premium quality discrete multichannel digital sound to both movies and music.
DTS is a multichannel sound system designed to create full range digital sound reproduction.
The no compromise DTS digital process sets the standard of quality for cinema sound by delivering an exact copy of the studio master recordings to neighborhood and home theaters.
Now, every moviegoer can hear the sound exactly as the moviemaker intended.
DTS can be enjoyed in the home for either movies or music on of DVD's, LD's, and CD's.

"DTS" and "DTS Digital Surround" are registered trademarks of Digital Theater Systems, Inc.

The advantages of discrete multichannel systems over matrix are well known.
But even in homes equipped for discrete multichannel, there remains a need for high-quality matrix decoding. This is because of the large library of matrix surround motion pictures available on disc and on VHS tape; and analog television broadcasts.
The typical matrix decoder of today derives a center channel and a mono surround channel from two-channel matrix stereo material. It is better than a simple matrix in that it includes steering logic to improve separation, but because of its mono, band-limited surround it can be disappointing to users accustomed to discrete multichannel.

Neo:6 offers several important improvements as follow,

- Neo:6 provides up to six full-band channels of matrix decoding from stereo matrix material. Users with 6.1 and 5.1 systems will derive six and five separate channels, respectively, corresponding to the standard home-theater speaker layouts.
- Neo:6 technology allows various sound elements within a channel or channels to be steered separately, and in a way which follows naturally from the original presentation.
- Neo:6 offers a music mode to expand stereo nonmatrix recordings into the five- or six-channel layout, in a way which does not diminish the subtlety and integrity of the original stereo recording.

DTS-ES Extended Surround is a new multichannel digital signal format developed by Digital Theater Systems Inc. While offering high compatibility with the conventional DTS Digital Surround format, DTS-ES Extended Surround greatly improves the 360-degree surround impression and space expression thanks to further expanded surround signals. This format has been used professionally in movie theaters since 1999.
In addition to the 5.1 surround channels (FL, FR, C, SL, SR and LFE), DTS-ES Extended Surround also offers the SB (Surround Back) channel for surround playback with a total of 6.1 channels. DTS-ES Extended Surround includes two signal formats with different surround signal recording methods, as DTS-ES Discrete 6.1 and DTS-ES Matrix 6.1.

"DTS", "DTS-ES" and "Neo:6" are trademarks of Digital Theater Systems, Inc.

The stereo CD is a 16-bit medium with sampling at 44.1 kHz. Professional audio has been 20- or 24-bit for some time, and there is increasing interest in higher sampling rates both for recording and for delivery into the home. Greater bit depths provide extended dynamic range. Higher sampling rates allow wider frequency response and the use of anti-alias and reconstruction filters with more favorable aural characteristics.

DTS 96/24 allows for 5.1channel sound tracks to be encoded at a rate of 96kHz/24bits on DVD-Video titles.
When DVD-video appeared, it became possible to deliver 24-bit, 96 kHz audio into the home, but only in two channels, and with serious limitations on picture. This capability has had little use.
DVD-audio allows 96/24 in six channels, but a new player is needed, and only analog outputs are provided, necessitating the use of the D/A converters and analog electronics provided in the player.

DTS 96/24 offers the following:

1. Sound quality transparent to the original 96/24 master.
2. Full backward compatibility with all existing decoders. (Existing decoders will output a 48 kHz signal)
3. No new player required: DTS 96/24 can be carried on DVD-video, or in the video zone of DVD-audio, accessible to all DVD players.
4. 96/24 5.1-channel sound with full-quality full-motion video, for music programs and motion picture soundtracks on DVD-video.

"DTS" and "DTS 96/24" are trademarks of Digital Theater Systems, Inc.

Dolby Digital identifies the use of Dolby Digital audio coding for such consumer formats as DVD and DTV. As with film sound, Dolby Digital can provide up to five full-range channels for left, center, and right screen channels, independent left and right surround channels, and a sixth (".1") channel for low-frequency effects.

Dolby Surround Pro Logic II is an improved matrix decoding technology that provides better spatiality and directionality on Dolby Surround program material; provides a convincing three-dimensional soundfield on conventional stereo music recordings; and is ideally suited to bring the surround experience to automotive sound. While conventional surround programming is fully compatible with Dolby Surround Pro Logic II decoders, soundtracks will be able to be encoded specifically to take full advantage of Pro Logic II playback, including separate left and right surround channels. (Such material is also compatible with conventional Pro Logic decoders.)

Dolby Digital EX creates six full-bandwidth output channels from 5.1-channel sources. This is done using a matrix decoder that derives three surround channels from the two in the original recording. For best results, Dolby Digital EX should be used with movies soundtracks recorded with Dolby Digital Surround EX.

***About Dolby Pro Logic IIx***

Dolby Pro Logic IIx technology delivers a natural and immersing 7.1-channel listening experience to the home theater environment. A product of Dolby's expertise in surround sound and matrix decoding technologies, Dolby Pro Logic IIx is a complete surround sound solution that maximizes the entertainment experience from stereo as well as 5.1-channel encoded sources.

Dolby Pro Logic IIx is fully compatible with Dolby Surround Pro Logic technology and can optimally decode the thousands of commercially available Dolby Surround encoded video cassettes and television programs with enhanced depth and spatiality. It can also process any high-quality stereo or Advanced Resolution 5.1-channel music content into a seamless 6.1- or 7.1-channel listening experience.

The Dolby Headphone technology provides a surround sound listening experience over headphones.
When listening to multichannel content such as DVD movies over headphones, the listening experience is fundamentally different than listening to speakers. Since the headphone speaker drivers are covering the pinna of the ear, the listening experience differs greatly from traditional speaker playback. Dolby utilizes patented headphone perspective curves to solve this problem and provides a non-fatiguing, immersive, home theater listening experience. Dolby Headphone also delivers exceptional 3D audio from stereo material.

Manufactured under license from Dolby Laboratories. "Dolby", "Pro Logic", and the double-D symbol are trademarks of Dolby Laboratories.

Circle Surround II (CS-II) is a powerful and versatile multichannel technology. CS-II is designed to enable up to 6.1 multichannel surround sound playback from mono, stereo, CS encoded sources and other matrix encoded sources. In all cases the decoder extends it into 6 channels of surround audio and a LFE/subwoofer signal. The CS-II decoder creates a listening environment that places the listener "inside" music performances and dramatically improves both hi-fi audio conventional surround-encoded video material. CS-II provides composite stereo rear channels to greatly improve separation and image positioning – adding a heightened sense of realism to both audio and A/V productions.
CS-II is packed with other useful feature like dialog clarity (SRS Dialog) for movies and cinema-like bass enrichment (TruBass). CS-II can enable the dialog to become clearer and more discernable in movies and it enables the bass frequencies contained in the original programming to more closely achieve low frequencies – overcoming the low frequency limitations of the speakers by full octave.

Circle Surround II, Dialog Clarity, TruBass, SRS and (●)® symbol are trademarks of SRS Labs, Inc.
Circle Surround II, Dialog Clarity and TruBass technology are incorporated under license from SRS Labs, Inc.

## 3. POWER AMPLIFIER ADJUSTMENT

**Idling Current Alignment**

1. Each of the measurement points are provided with the two test points. Set a digital Voltage meter to DC voltage input, connect the meter to the test points at both contact points.
2. After the setup above, turn on the main switch.
3. Adjust variable resistors (VR41, VR42…VR71) according to the digital voltmeter readings. The target setting value is the following table for each channel.

Settings: Master Volume — Minimum
Speaker out — No Load
Top lid — OPEN

| Channel | Alignment Point | Measurement Point |
|---|---|---|
| Front L | VR41 | CN41 |
| Center | VR61 | CN61 |
| Front R | VR51 | CN51 |
| Surround L | VR42 | CN42 |
| Surround R | VR52 | CN52 |
| Surround Back L | VR62 | CN62 |
| Surround Back R | VR71 | CN71 |

**Time Table of Idling Current Rise**

| After Turning ON | Ambient temperature 10 to 19 degrees centigrade | Ambient temperature 20 to 30 degrees centigrade |
|---|---|---|
| | Measurement Voltage | Measurement Voltage |
| 5 min. | 1.2 mV ± 0.3 mV | 2.0 mV ± 0.3 mV |
| 10 min. | 1.2 mV ± 0.3 mV | 2.1 mV ± 0.3 mV |
| 20 min. | 1.4 mV ± 0.3 mV | 2.5 mV ± 0.3 mV |
| 30 min. | 1.6 mV ± 0.3 mV | 2.7 mV ± 0.3 mV |
| 40 min. | 1.7 mV ± 0.3 mV | 2.9 mV ± 0.3 mV |
| 50 min. | 1.8 mV ± 0.3 mV | 3.1 mV ± 0.3 mV |
| 60 min. | 1.9 mV ± 0.3 mV | 3.2 mV ± 0.3 mV |

## 4. SERVICE MODE

Microprocessor (IC28), DSP(IC20 )Version and FLD Segment Check Mode.

1. While the power is on, **MULTI**, **EXIT** and **7.1CH INPUT** buttons simultaneously more than 3 seconds.
   The FL display shows “SERVICE MODE” for 2 seconds then shows the model name.

| | | | | | | | | | | | | |
|---|---|---|---|---|---|---|---|---|---|---|---|---|
| S | E | R | V | I | C | E | | M | O | D | E | |

| | | | | | | | | | | | | |
|---|---|---|---|---|---|---|---|---|---|---|---|---|
| | | | S | R | 5 | 5 | 0 | 0 | | | | |

2. Press **MULTI** button, The software version of the microprocessor (IC28) is displayed in the format below.

| | | | | | | | | | | | | |
|---|---|---|---|---|---|---|---|---|---|---|---|---|
| V | 0 | 4 | 0 | 6 | 2 | 4 | | I | U | | | |

Year, Month, Date, Dest.
(Dest. : Destination)

3. Press **MULTI** button again, The software Type Number is displayed.

| | | | | | | | | | | | | |
|---|---|---|---|---|---|---|---|---|---|---|---|---|
| S | O | F | T | | T | Y | P | E | | | X | X |

(XX is displayed in Hex)

4. Press **MULTI** button again, The Code Group Type Number is displayed.

| | | | | | | | | | | | | |
|---|---|---|---|---|---|---|---|---|---|---|---|---|
| C | O | D | E | | T | Y | P | E | X | X | X | X |

(XXXX is displayed in Hex)

5. Press **MULTI** button again, The left half, right half and center of the label area in the FLD light on and off each other.
6. Press **MULTI** button again, The segments of the character area in the FLD flick in checker pattern.
7. Press **MULTI** button again, All the FL segments turns off.
8. Press **MULTI** button again. Every time **MULTI** button is pressed, DSP code is indicated in turn from NO.1 to NO.10.

| | | | | | | | | | | | | |
|---|---|---|---|---|---|---|---|---|---|---|---|---|
| C | D | 0 | 1 | | 0 | 1 | 0 | 2 | 0 | 1 | 0 | 1 |

No., Dev., SIG, TYP, Ver.

No. : DISP CODE ID Dev. : Device ID SIG. : CODE SIG ID
TYP. : CODE TYPE ID Ver. : Version

9. Press **MULTI** button again to quit this mode.

## 4. SERVICE MODE

Microprocessor (IC28), DSP(IC20 )のVersion表示及びFL点燈を確認するモードです。

1. セットの電源を入れます。**MULTI**、**EXIT**、**7.1CH INPUT**のボタンを同時に約３秒以上押します。
   “**SERVICE MODE**” と表示が出ます。更に約２秒後に機種名が表示されます。

| | | | | | | | | | | | | |
|---|---|---|---|---|---|---|---|---|---|---|---|---|
| S | E | R | V | I | C | E | | M | O | D | E | |

| | | | | | | | | | | | | |
|---|---|---|---|---|---|---|---|---|---|---|---|---|
| | | | S | R | 5 | 5 | 0 | 0 | | | | |

2. **MULTI**ボタンを押します。マイコン（IC28）のバージョンが次のように表示されます。

| | | | | | | | | | | | | |
|---|---|---|---|---|---|---|---|---|---|---|---|---|
| V | 0 | 4 | 0 | 6 | 2 | 4 | | I | U | | | |

Year, Month, Date, Dest.
(Dest. : 仕向け)

3. **MULTI**ボタンを押します。マイコン（IC28）のSoftware Typeが表示されます。

| | | | | | | | | | | | | |
|---|---|---|---|---|---|---|---|---|---|---|---|---|
| S | O | F | T | | T | Y | P | E | | | X | X |

(XX: Hex数字表示)

4. **MULTI**ボタンを押します。Code Group Typeが表示されます。

| | | | | | | | | | | | | |
|---|---|---|---|---|---|---|---|---|---|---|---|---|
| C | O | D | E | | T | Y | P | E | X | X | X | X |

(XXXX: Hex数字表示)

5. **MULTI**ボタンを押します。FL表示の右、左、中央部分が交互に点燈を繰り返します。
6. **MULTI**ボタンを押します。FLのCharacter部分が点滅します。
7. **MULTI**ボタンを押します。FLが全消灯します。
8. **MULTI**ボタンを押します。**MULTI**ボタンを押す度にDSP Code IDがNO.1からNO.10まで順に表示されます。

| | | | | | | | | | | | | |
|---|---|---|---|---|---|---|---|---|---|---|---|---|
| C | D | 0 | 1 | | 0 | 1 | 0 | 2 | 0 | 1 | 0 | 1 |

No., Dev., SIG, TYP, Ver.

No. : DISP CODE ID Dev. : Device ID SIG. : CODE SIG ID
TYP. : CODE TYPE ID Ver. : Version

9. **MULTI**ボタンを押します。サービスモードは解除されます。

**Note:** Step4, 5 is to check if CPU software is capable of DSP code. “Software Type No” is to show what “DSP Code Group” CPU is capable of. And vice versa.
Step 8 is to manage the 16 codes for DSP.

- When the unit is once turned into Service Mode, the unit keeps this mode until the main power is turned off. (Turning into stand-by mode does not make it quit from Service Mode.) When the unit quits from Service Mode, Information in the memory is also cleared and the unit returns to the status when it is out from the factory.

**Product Reset**

To reset the back up memory of the unit into the default status, follow the procedure below.

1. Turn of the unit and press **7.1CH INPUT** and **MULTI** button simultaneously more than 1.5 seconds.
2. After “DEFAULT” is displayed on FLD, power is turned off once and turned of again, EEPROM is cleared to the default status, µ-com is reset and the unit returns to the normal status. (Software Serial Number will not be cleared.)

**Note:** When the unit is shipped from the factory, the procedure above must be done to set the unit to initial status after the tests.

***Personal notes:***

## 5. SYSTEM ERROR

When the microcomputer detects a trouble, the following information is displayed on the FLD.

- After the error contents indication, Surround Mode is initialized and returned Factory mode.
- The contents of the ERROR indication are the followings.

**1. Trouble in DSP**

If communication with DSP is troubled more than 2 seconds.

| | | | | | | | | | | | | |
|---|---|---|---|---|---|---|---|---|---|---|---|---|
| C | H | E | C | K | | D | S | P | | | | |

Indication is keep and sound is mute.

**2. Trouble in DSP Code**

The trouble of DSP Code was found.

| | | | | | | | | | | | | |
|---|---|---|---|---|---|---|---|---|---|---|---|---|
| C | H | E | C | K | | D | S | P | | R | O | M |

**3. Trouble in ADC**

When ADC input was chosen and CAL signal continued High about 2 seconds after the ADC Calibration start.

| | | | | | | | | | | | | |
|---|---|---|---|---|---|---|---|---|---|---|---|---|
| C | H | E | C | K | | A | D | C | | | | |

**4. Trouble in EEP-ROM**

If data from EEPROM does not match.

| | | | | | | | | | | | | |
|---|---|---|---|---|---|---|---|---|---|---|---|---|
| C | H | E | C | K | | E | 2 | P | | | | |

**5. Trouble in EEP-ROM IF**

If communication with EEPROM is troubled more than 2 seconds.

| | | | | | | | | | | | | |
|---|---|---|---|---|---|---|---|---|---|---|---|---|
| C | H | E | C | K | | E | 2 | P | | I | F | |

**6. Trouble in RS-232C**

If communication of Panja with RS232C is troubled more than 2 seconds.

| | | | | | | | | | | | | |
|---|---|---|---|---|---|---|---|---|---|---|---|---|
| C | H | E | C | K | | 2 | 3 | 2 | C | | | |

**7. Trouble in 5V Supply**

If 5V supply to DATA DIR is troubled.

| | | | | | | | | | | | | |
|---|---|---|---|---|---|---|---|---|---|---|---|---|
| C | H | E | C | K | | P | O | W | 5 | | | |

**8. Trouble in Protection**

CPU turns off the speaker output.

| | | | | | | | | | | | | |
|---|---|---|---|---|---|---|---|---|---|---|---|---|
| P | R | O | T | E | C | T | | | | | | |

## 5. SYSTEM ERROR

製品内部での異常発生時に処理、表示を行います。主に各Deviceとの通信異常を検出します。

- ERROR表示後、Surround Modeは初期化され工場出荷の状態に戻ります。
- ERROR表示の内容は下記です。

**1. DSP異常検出表示。**

DSPとの通信上の不具合を約2秒検出した時。

| | | | | | | | | | | | | |
|---|---|---|---|---|---|---|---|---|---|---|---|---|
| C | H | E | C | K | | D | S | P | | | | |

表示状態はそのままで音声はMute状態

**2. DSP Code異常検出表示。**

DSP Codeの異常を検出した時。

| | | | | | | | | | | | | |
|---|---|---|---|---|---|---|---|---|---|---|---|---|
| C | H | E | C | K | | D | S | P | | R | O | M |

**3. ADC異常検出表示。**

ADC入力を選択した場合にADC Calibration開始後、CAL信号が約2秒以上Highを持続した時。

| | | | | | | | | | | | | |
|---|---|---|---|---|---|---|---|---|---|---|---|---|
| C | H | E | C | K | | A | D | C | | | | |

**4. EEP-ROM異常検出表示。**

EEP-ROM Dataの不整合を検出した時。

| | | | | | | | | | | | | |
|---|---|---|---|---|---|---|---|---|---|---|---|---|
| C | H | E | C | K | | E | 2 | P | | | | |

**5. EEP-ROM IF異常検出表示。**

EEP-ROMとの通信不具合が約2秒以上生じた時。

| | | | | | | | | | | | | |
|---|---|---|---|---|---|---|---|---|---|---|---|---|
| C | H | E | C | K | | E | 2 | P | | I | F | |

**6. RS-232C異常検出表示。**

Panja通信時にRS-232Cとの通信不具合を約2秒以上検出した時。

| | | | | | | | | | | | | |
|---|---|---|---|---|---|---|---|---|---|---|---|---|
| C | H | E | C | K | | 2 | 3 | 2 | C | | | |

**7. 5V異常検出表示。**

DATA DIR.の異常を検出した時。

| | | | | | | | | | | | | |
|---|---|---|---|---|---|---|---|---|---|---|---|---|
| C | H | E | C | K | | P | O | W | 5 | | | |

**8. Protection信号異常検出表示。**

Speakerからを出力を止めます。

| | | | | | | | | | | | | |
|---|---|---|---|---|---|---|---|---|---|---|---|---|
| P | R | O | T | E | C | T | | | | | | |

# 6. UPDATE FIRMWARE

Software for CPU and DSP can be updated.
Have update application software. (“UpgradeDSP.exe” and “H8Download.exe”)
There are two mode of download, regarding to the target of software as bellow.

Mode 1: Update DSP’s software to 4M Flash-ROM.
This mode is to update the software for DSP.
The target devise is 4M Flash-ROM (IC20) on CUP11706Z (DSP PCB).
HT-AS2000 needs to be set update condition, by three front keys.
Mode 2: Update CPU’s software to internal Flash-ROM.
This mode is to update the software for DSP.
The target devise is internal flash ROM of CPU (IC28) on CUP11706Z (DSP PCB).
HT-AS2000 needs to be set to writing condition, by pushing internal switch from back-panel.
The following items are required for updating.
RS232C Dsub-9 pin cable (female to female/Straight type)
Windows PC (98, NT, ME, 2000) with RS-232C port.
Update software to CPU.
Update software to DSP.
Use RS232C Dsub-9 pin cable (female to female/Straight type) to connect PC and the unit.
COM port on PC needs to be set by dialog box for each program. COM port can be set from COM1 to COM5.

**Download Firmware for DSP (Mode 1)**

1. Put the “DSP upgrade” folder into anywhere on your PC’s hard disc.

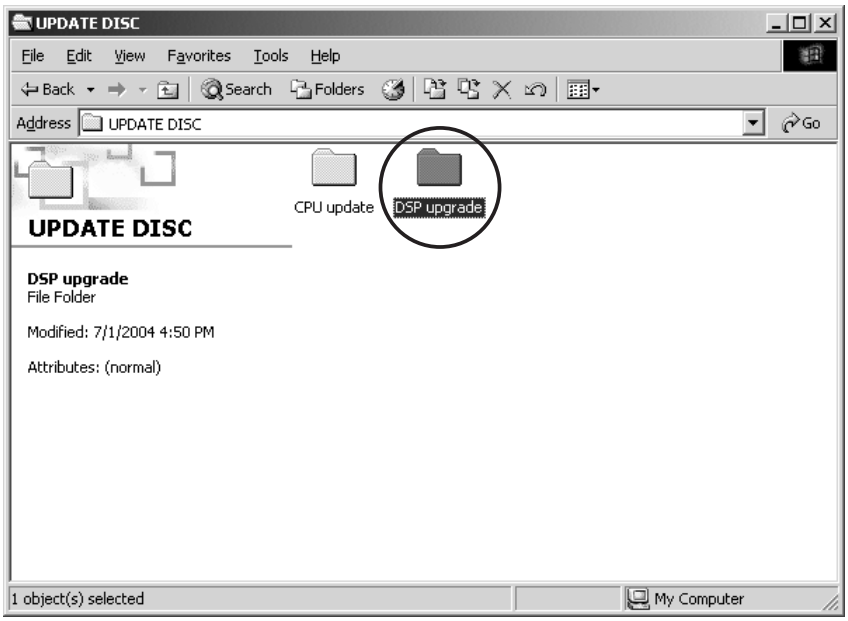


2. Connect PC and the unit with the RS-232C cable.

3. Turn on the unit.

4. Press **ENTER**, **MUTE** and **T-MODE** buttons simultaneously more than 5 seconds to turn the unit into Loading Mode.

5. “LOADING MODE” will be shown on FLD.

6. Launch “UpgradeDSP.exe” on PC.

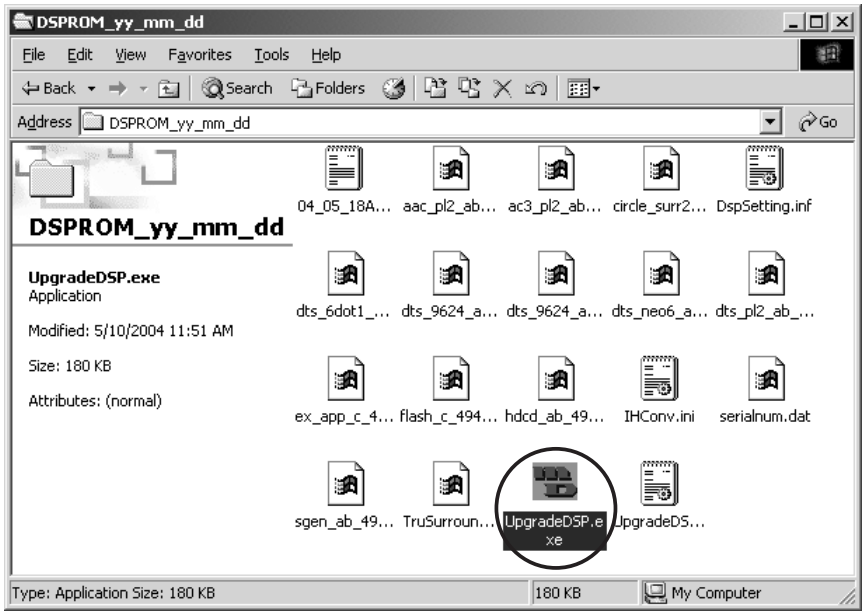


Note: yy_mm_dd is release date of software.

7. Click **Port setting**, and select the COM Port No.

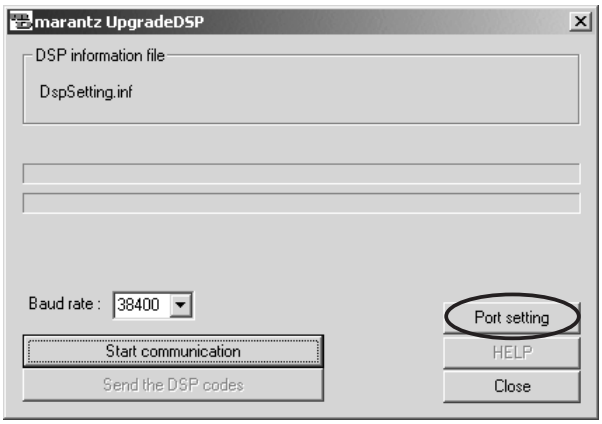


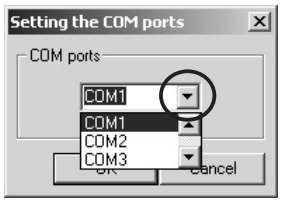


8. Set the Baud Rate to 38400 then click **Start communication** button.

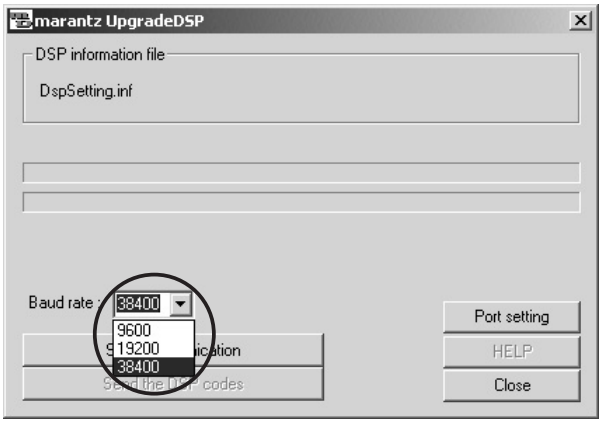


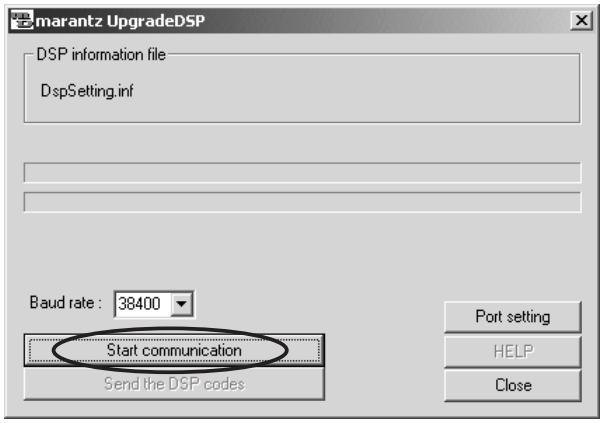

9. If the connection is made successfully, a dialog box saying “Success to connect” appears and “CONNECTED” is displayed on FLD.

10. Click **Send the DSP codes** button on the dialog box. Progress status of updating will be shown on PC and LOADING is displayed on FLD.

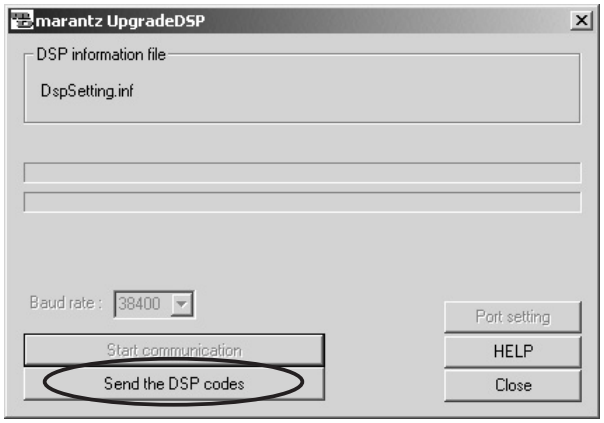


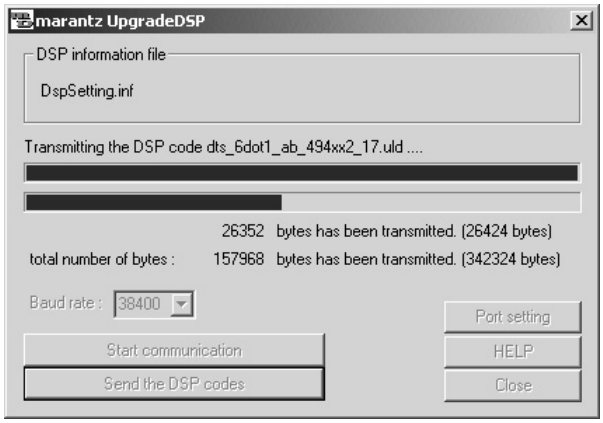


11. If updating is completed successfully, “COMPLETED” is displayed on FLD. And a dialog box saying “Finished the DSP code transmitting” appears. Click **OK** and then Application is closed automatically.

12. Turn off the unit.

**Download Firmware for CPU (Mode 2)**

1. Put the “CPU update” folder into anywhere on your PC’s hard disc.

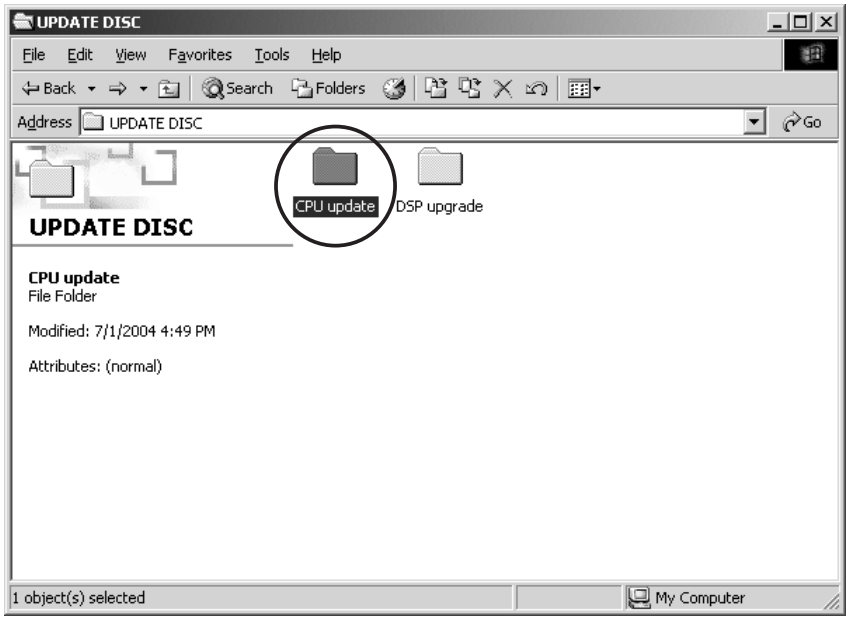

2. Connect PC and the unit with the RS-232C cable.

3. Insert a thin rot to the hole and push the switch (SW10) inside to turn on the switch.

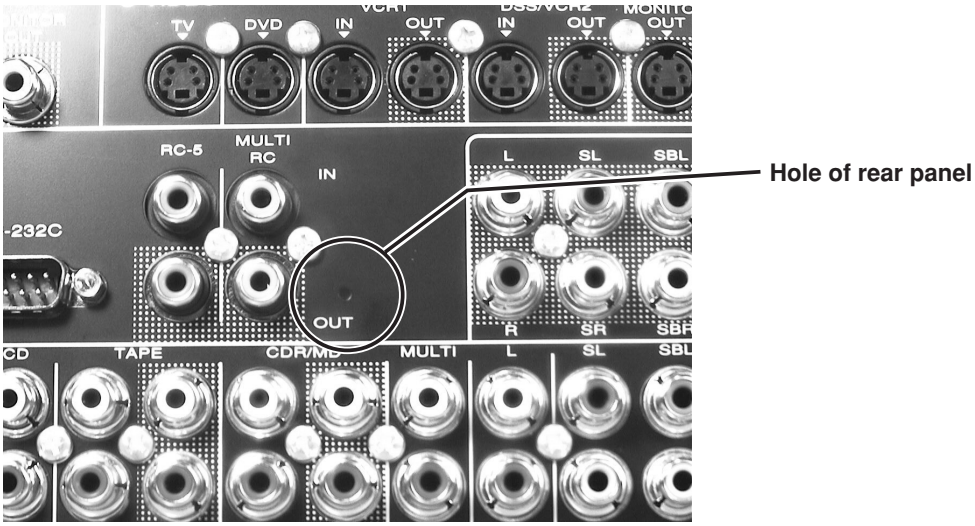


4. Turn on the power of the unit.
   **Note:** When the unit is into boot mode, stand-by LED is not lights up.

5. Launch “H8Download.exe” on PC.

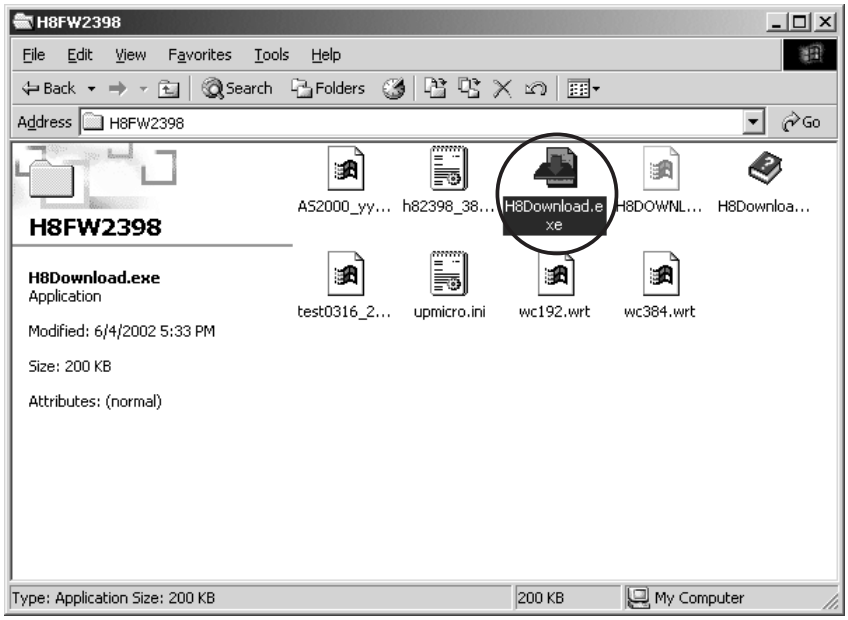


6. Click **Set Ports** , and select the COM Port No.

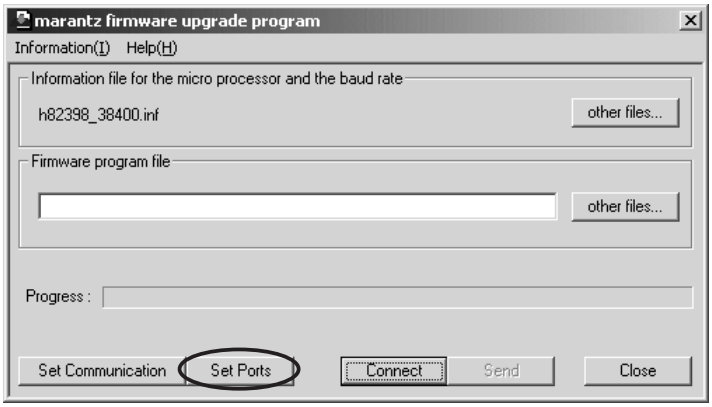


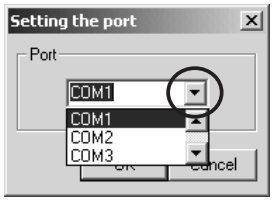

7. Click **other files...** button in the dialog box to specify the file (SR5500_yymmdd.mot) to be uploading. yymmdd in filename is release date of software.

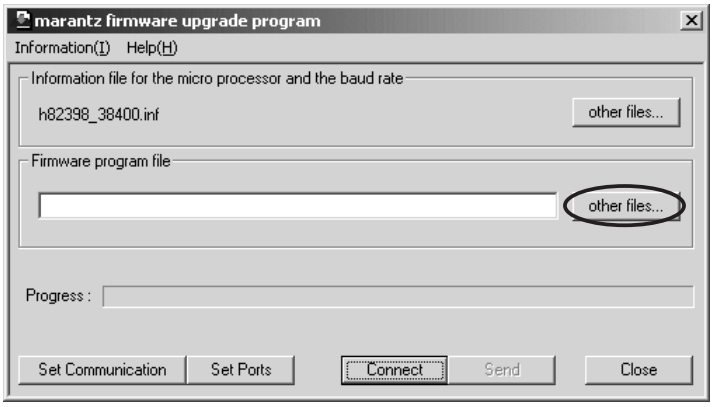


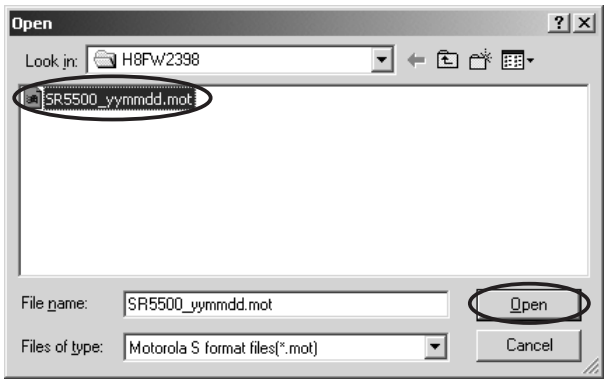


8. Click **Connect** button. If the connection with the H8 μ-P is successfully made, a dialogue box saying “Success to the H8 micro processor connection” appears. If the connection fails, error message will appear.

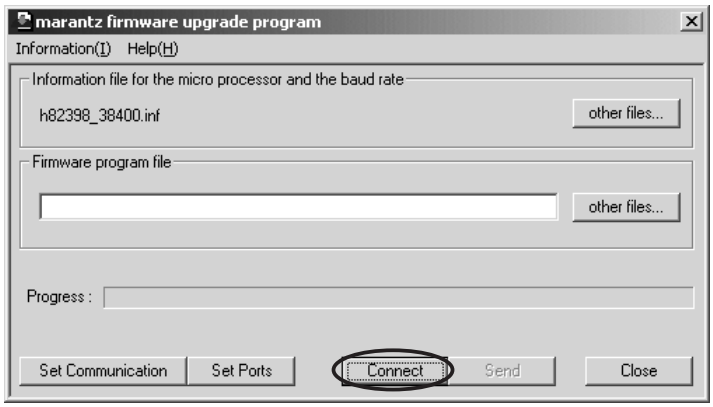

9. Click **Send** button to start update.

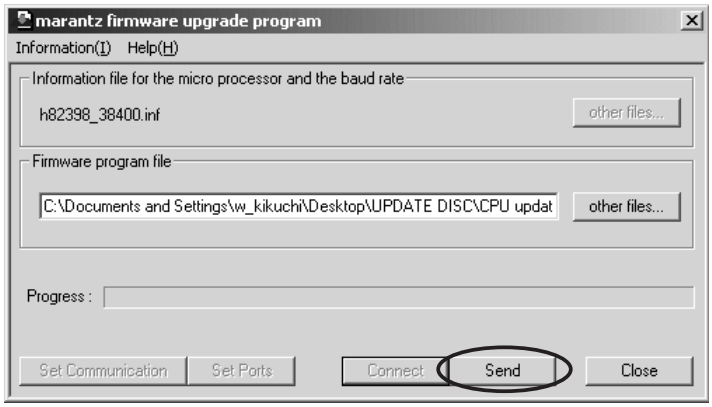


10. If the firmware is updated successfully, a dialog box saying “Finished the firmware program sending” appears.

11. Click **CLOSE** button to close the application.

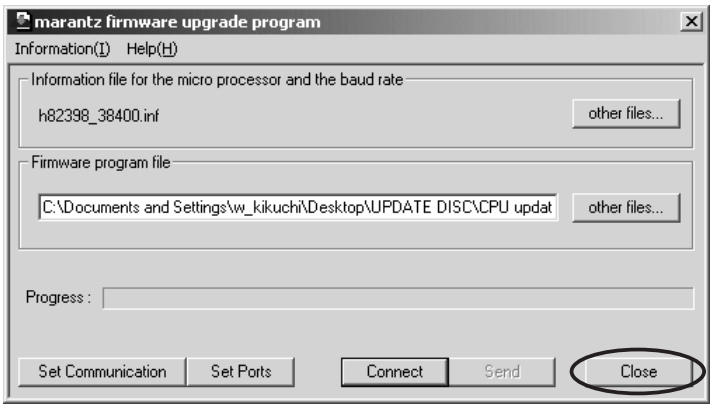


12. Disconnect Mains power cord.

13. Turn off the internal switch that has been turned on at step 3.

14. Turn on the unit.

**Firmware Version Check**

To check the versions of the firmware, see “Microprocessor (CPU), DSP Version and FLD Segment Check Mode” in “SERVICE MODE” section.

## 7. WIRING DIAGRAM

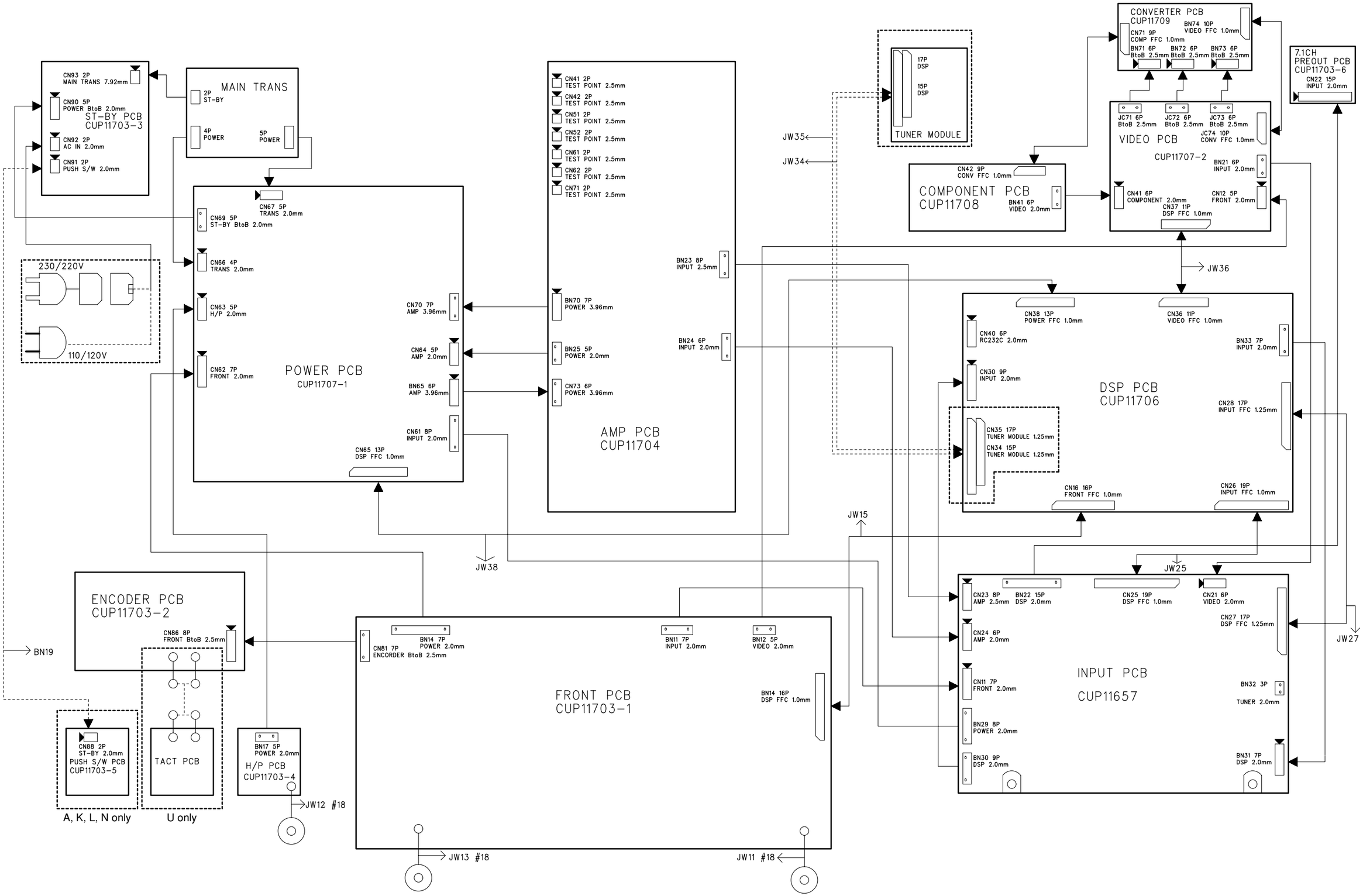

# 8. BLOCK DIAGRAM

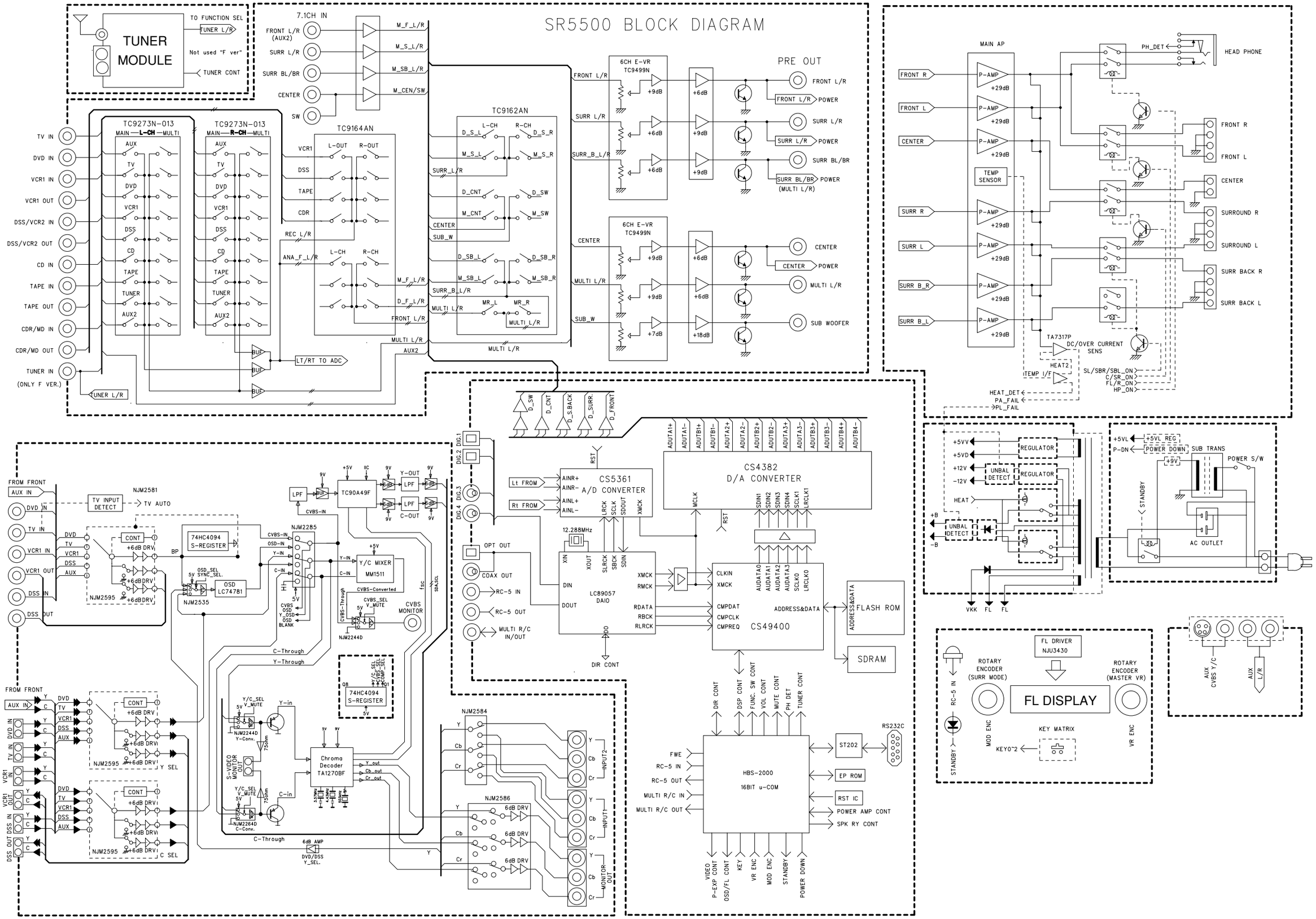

# 9. SCHEMATIC DIAGRAM

## Input

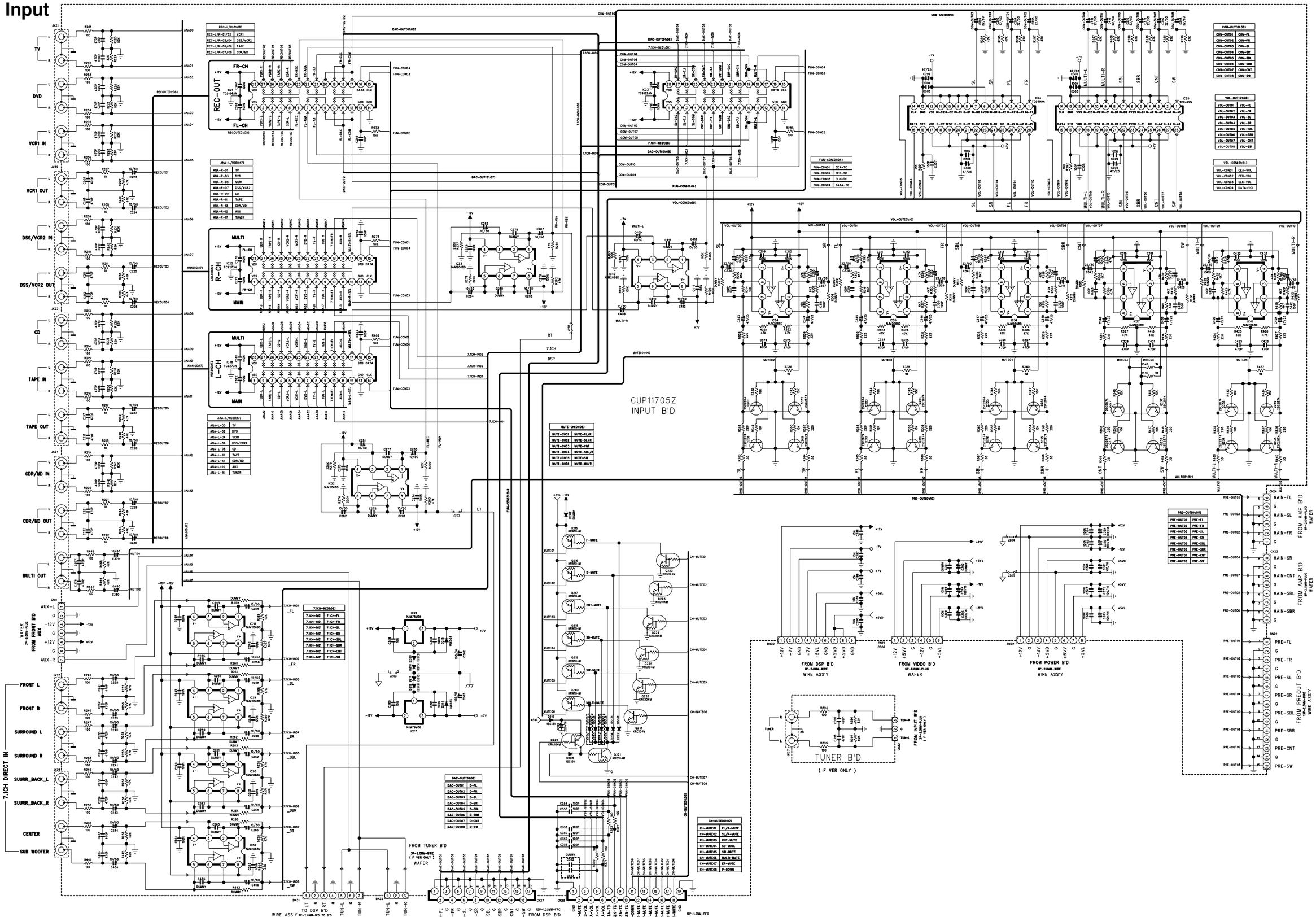

# DSP Block

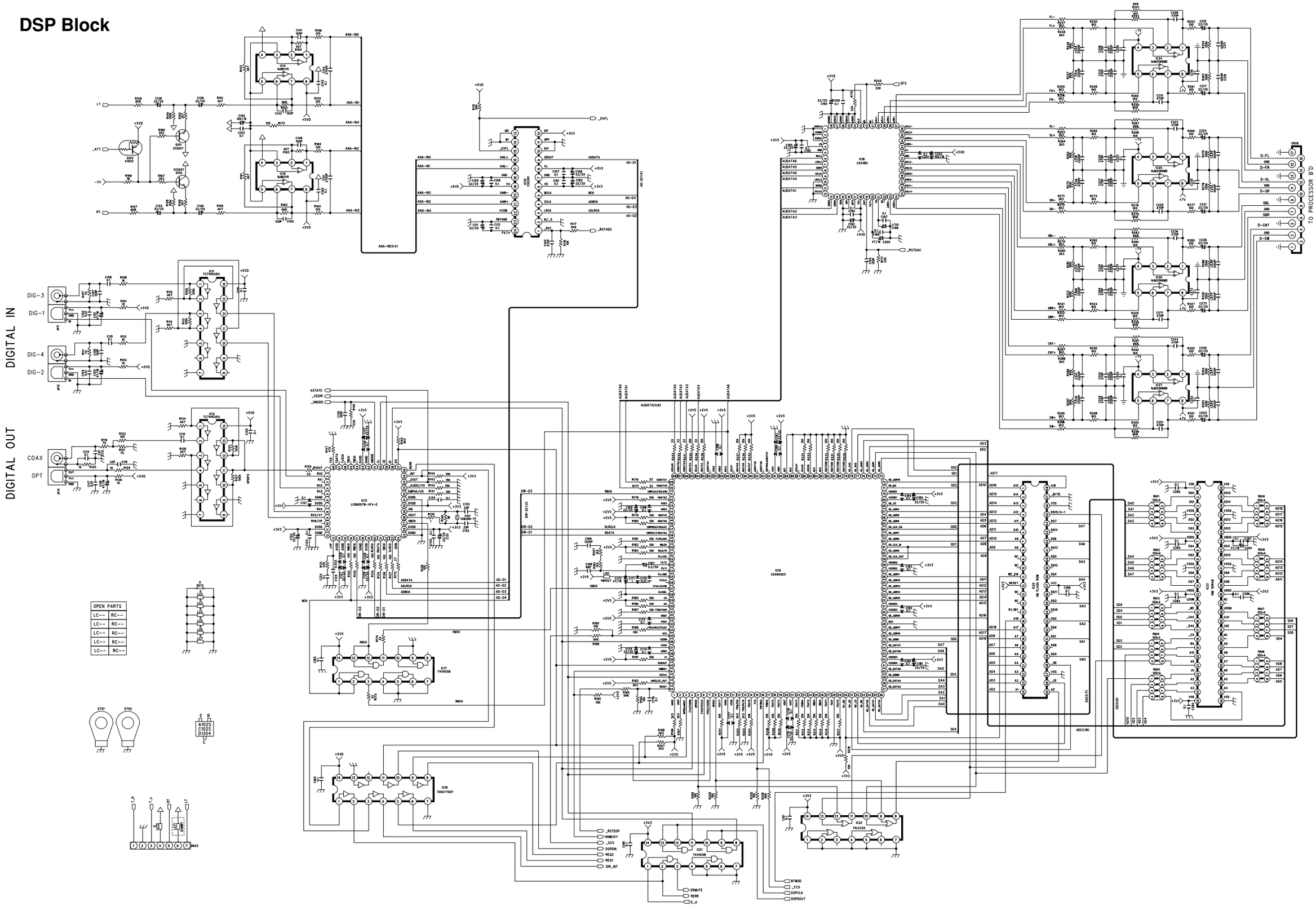
DIGITAL IN
DIG-3
DIG-1
DIG-4
DIG-2
DIGITAL OUT
COAX
OPT
TO PROCESSOR BD
OPEN PARTS
LC-- RC--
LC-- RC--
LC-- RC--
LC-- RC--
LC-- RC--

# CPU Block

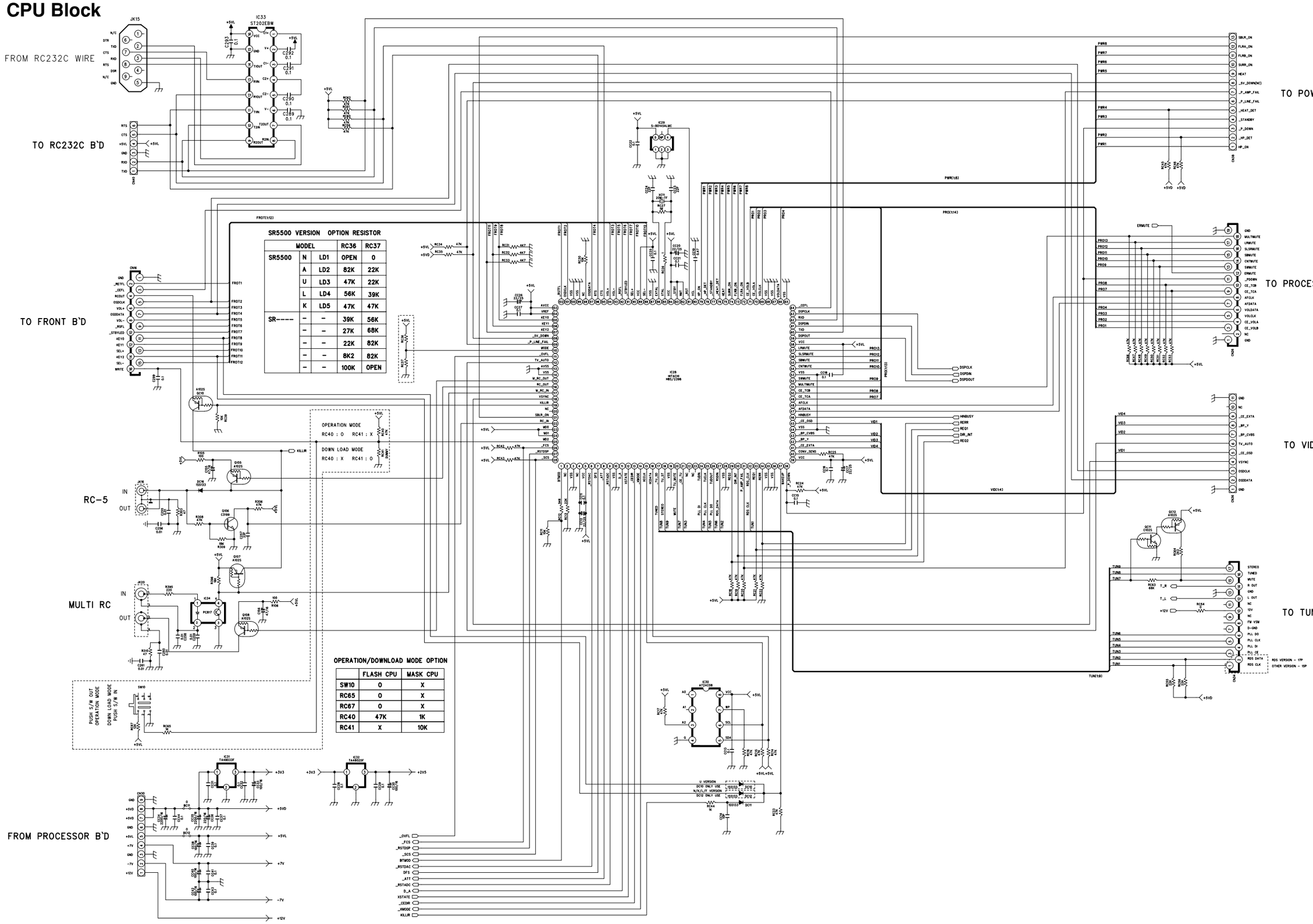


| | FLASH CPU | MASK CPU |
|---|---|---|
| SW10 | O | X |
| RC65 | O | X |
| RC67 | O | X |
| RC40 | 47K | 1K |
| RC41 | X | 10K |

# Front

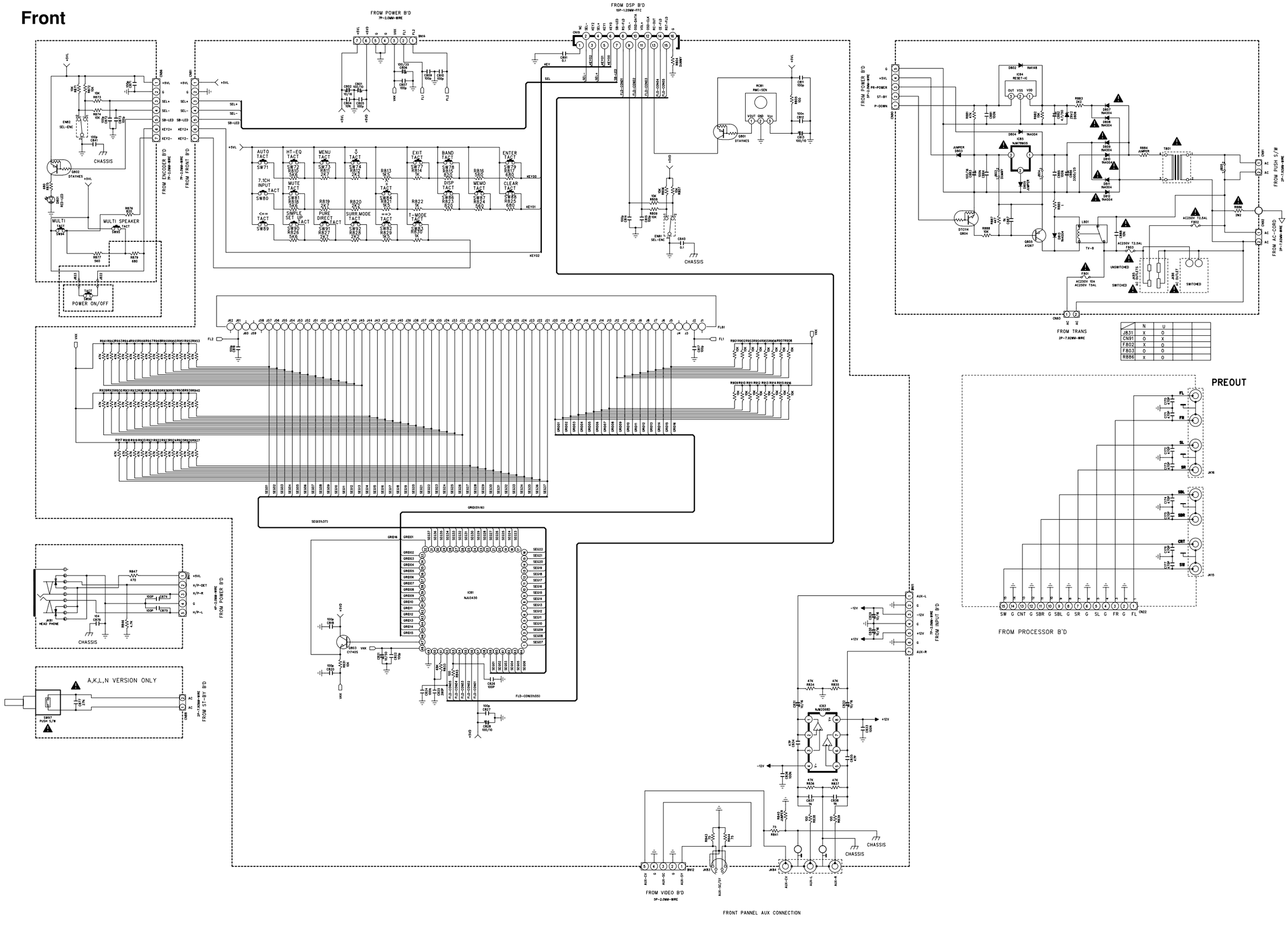


| | N | U | | |
|---|---|---|---|---|
| J831 | X | 0 | | |
| CN91 | O | X | | |
| F802 | X | 0 | | |
| F803 | O | 0 | | |
| RB86 | X | O | | |

# Video

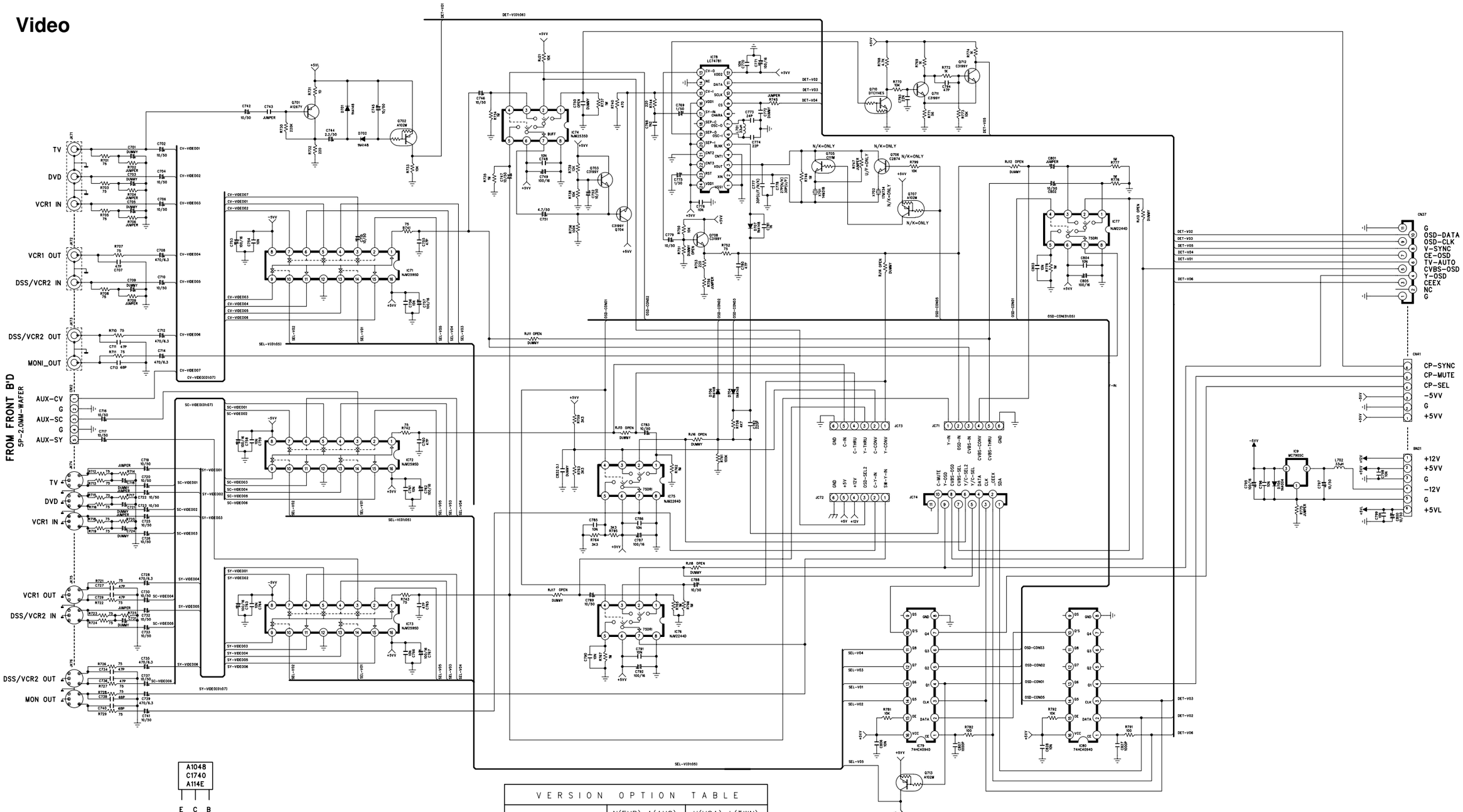


| VERSION OPTION TABLE | | | |
|---|---|---|---|
| | | N(EUR) A(AUS) K(CHN) | U(USA) L(TWN) F(JPN) |
| C777 | LOAD CAP | 30p | 30p |
| C778 | LOAD CAP | 27p | 30p |
| Q705 | KRC111M | ○ | × |
| Q706 | KRC111M | ○ | × |
| Q707 | KRA102M | ○ | × |
| R747 | JUMPER | × | ○ |
| X702 | 17.7344MHz | ○ | × |

## Component

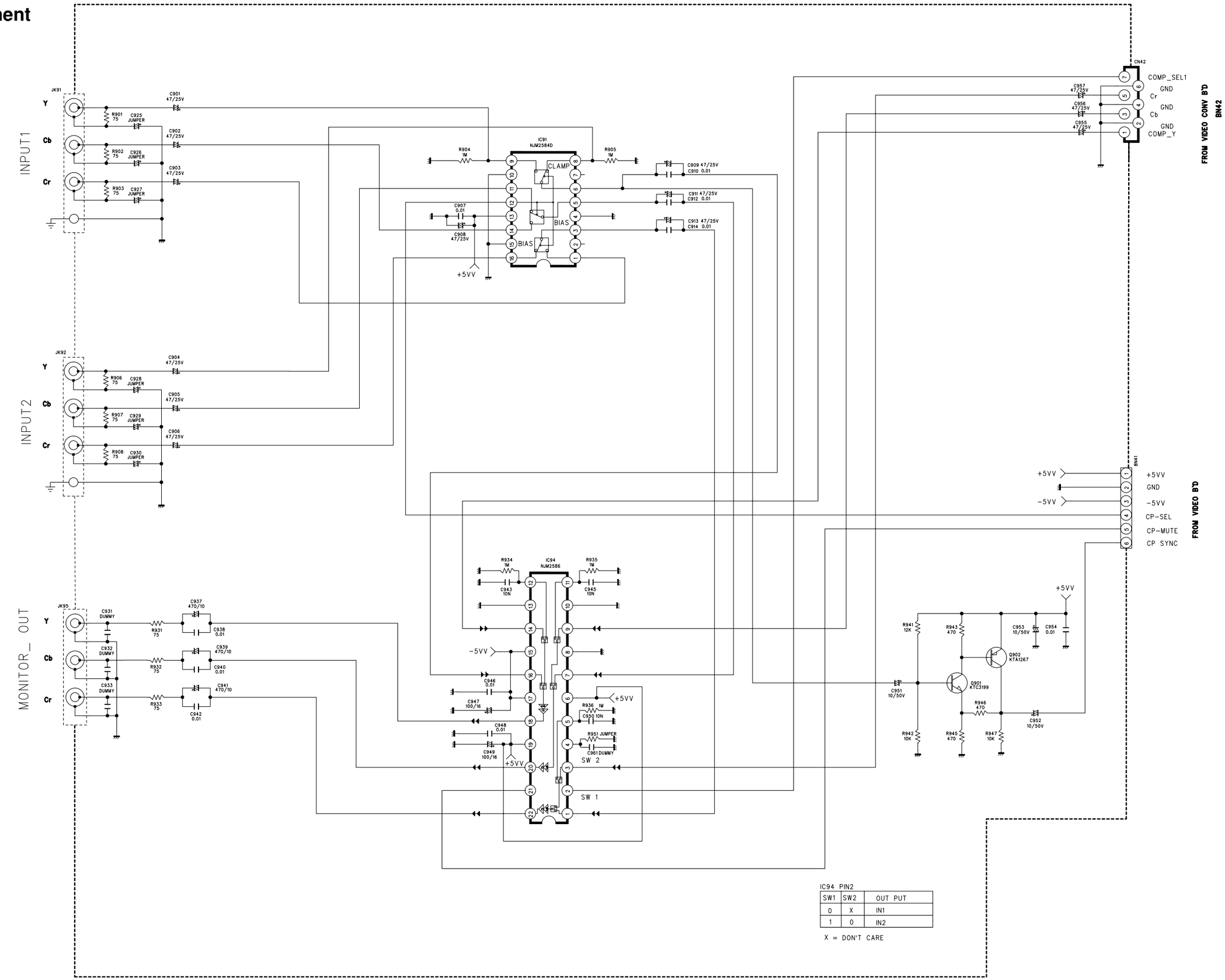


IC94 PIN2

| SW1 | SW2 | OUT PUT |
|---|---|---|
| 0 | X | IN1 |
| 1 | 0 | IN2 |

X = DON'T CARE

# Video Converter

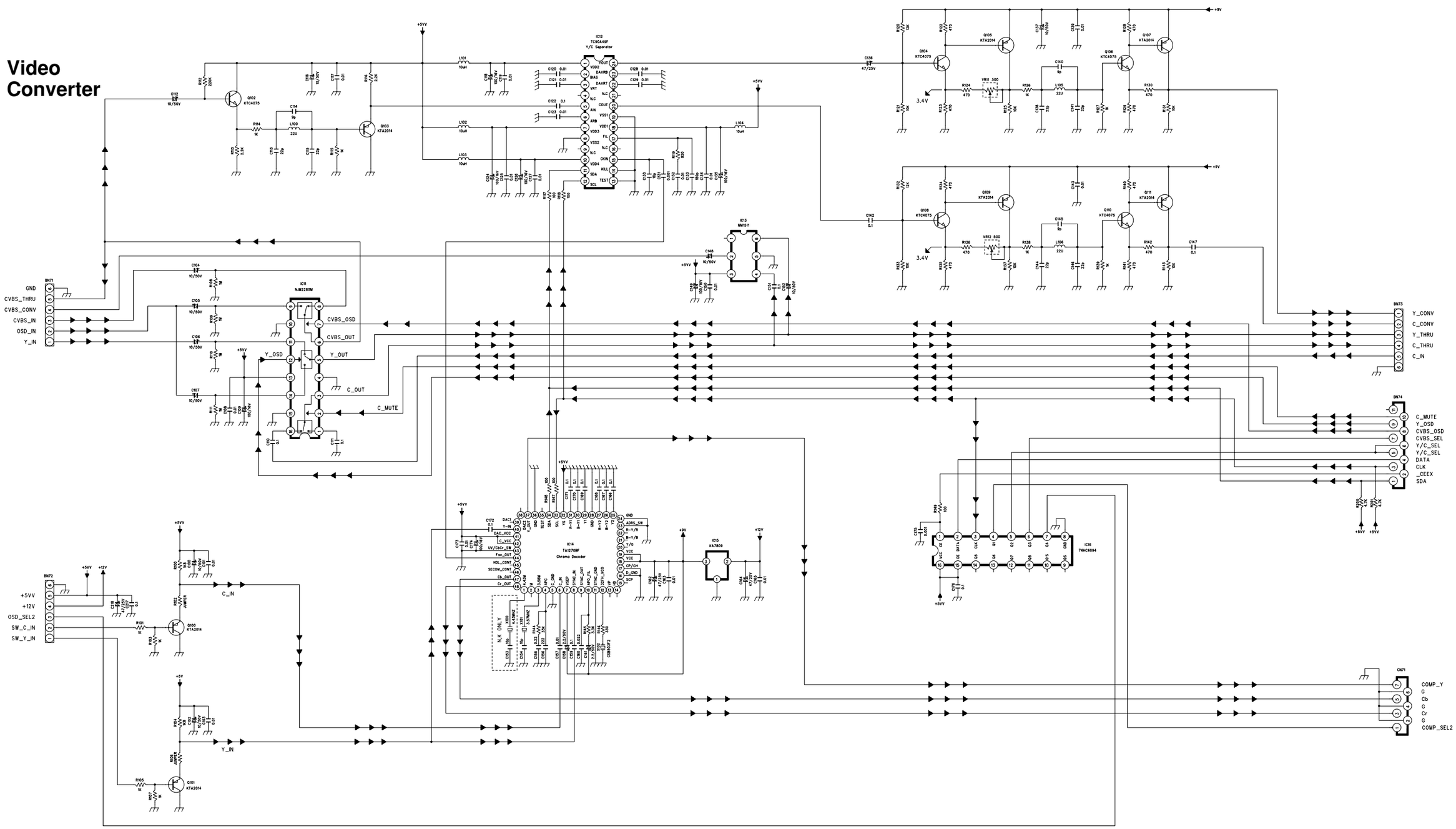

# AMP

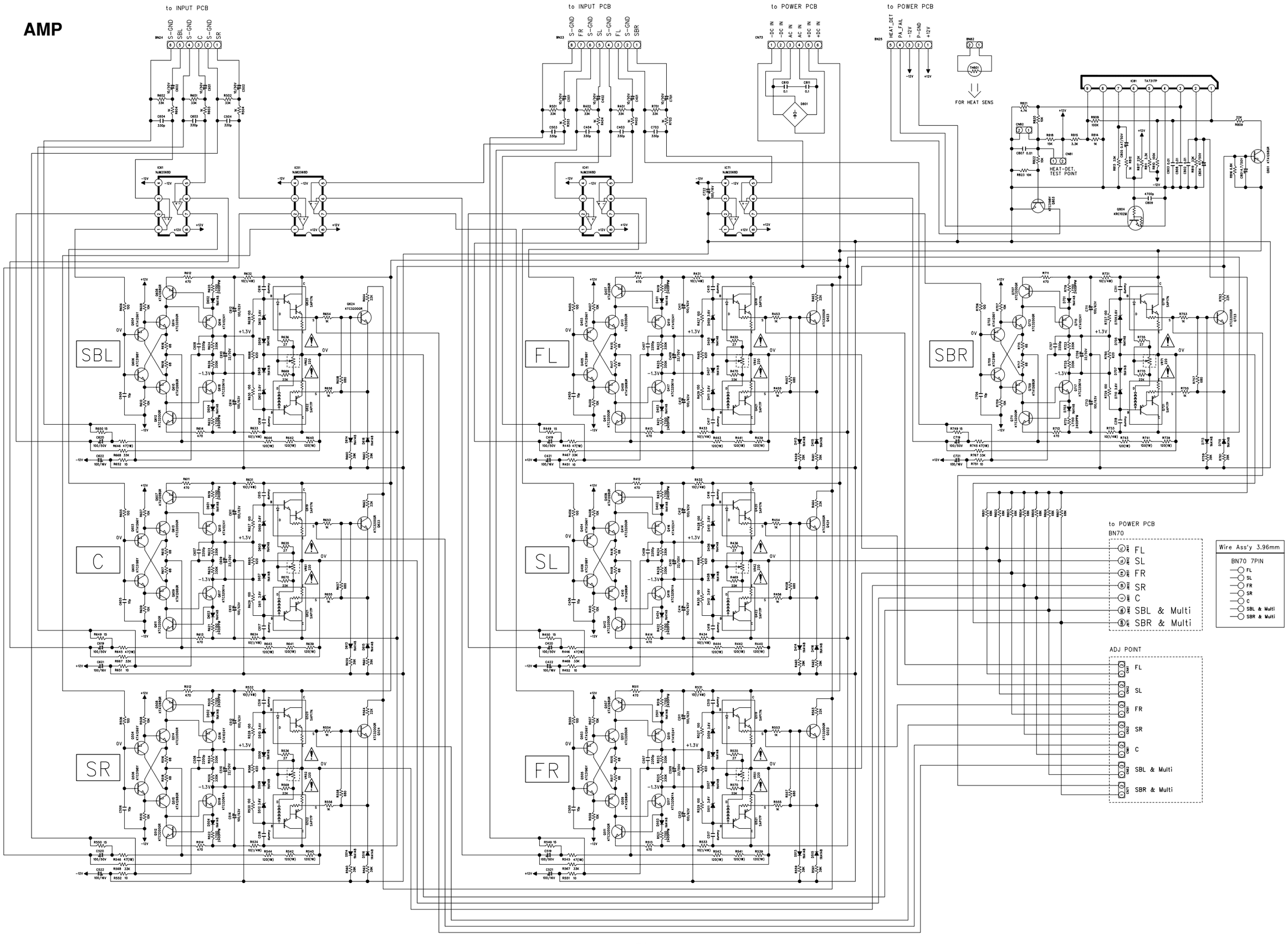
to INPUT PCB
BN24
S-GND
SBL
S-GND
C
S-GND
SR
to INPUT PCB
BN23
S-GND
FR
S-GND
SL
S-GND
FL
S-GND
SBR
to POWER PCB
CN73
-DC IN
-DC IN
AC IN
AC IN
+DC IN
+DC IN
to POWER PCB
BN25
HEAT_DET
PA_FAIL
-12V
P-GND
+12V
FOR HEAT SENS
HEAT-DET. TEST POINT
SBL
FL
SBR
C
SL
SR
FR
to POWER PCB
BN70
FL
SL
FR
SR
C
SBL & Multi
SBR & Multi
ADJ POINT
FL
SL
FR
SR
C
SBL & Multi
SBR & Multi
Wire Ass'y 3.96mm
BN70 7PIN
FL
SL
FR
SR
C
SBL & Multi
SBR & Multi

# Power & SPK

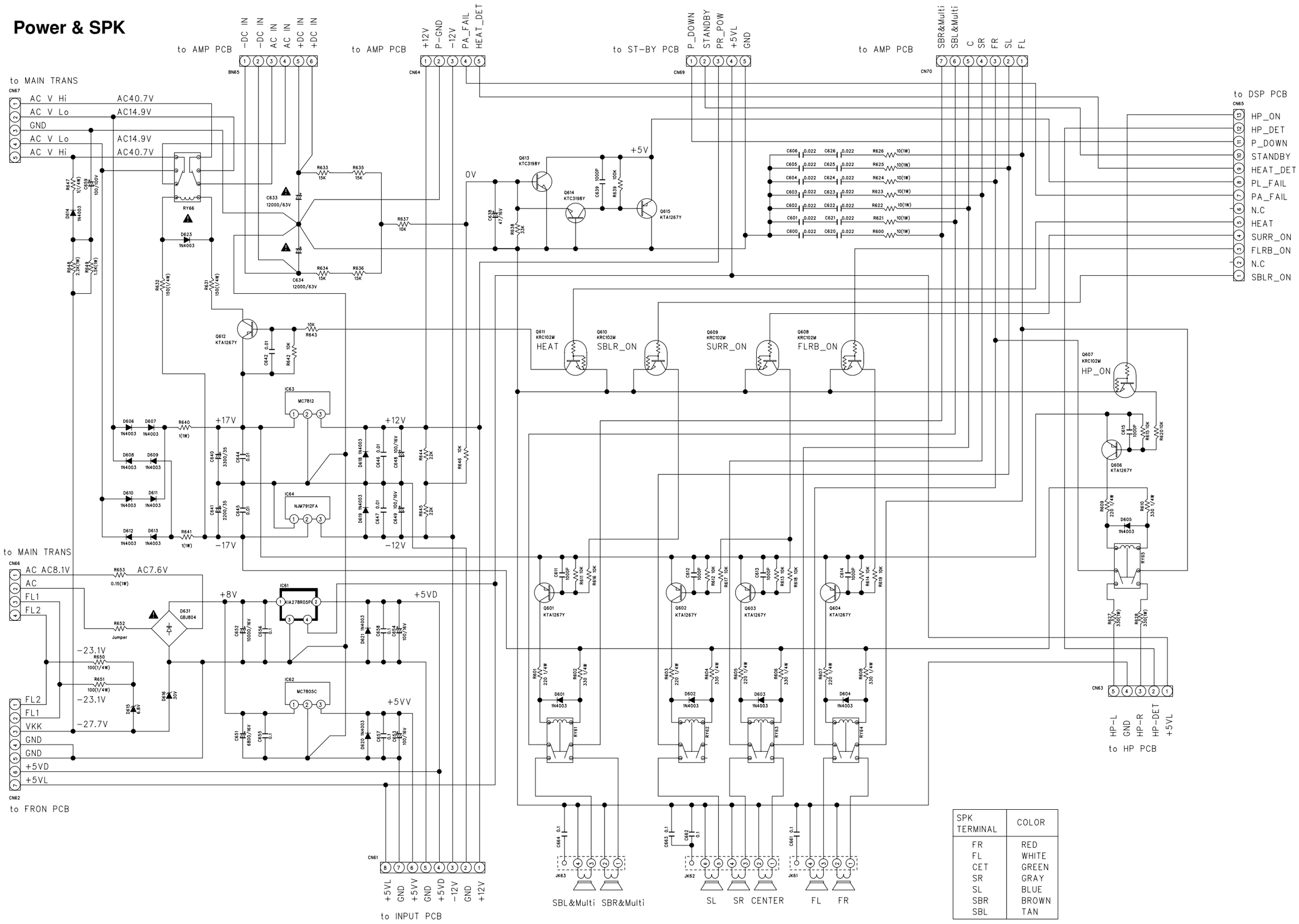


| SPK TERMINAL | COLOR |
|---|---|
| FR | RED |
| FL | WHITE |
| CET | GREEN |
| SR | GRAY |
| SL | BLUE |
| SBR | BROWN |
| SBL | TAN |

## 10. PARTS LOCATION

### FRONT PCB

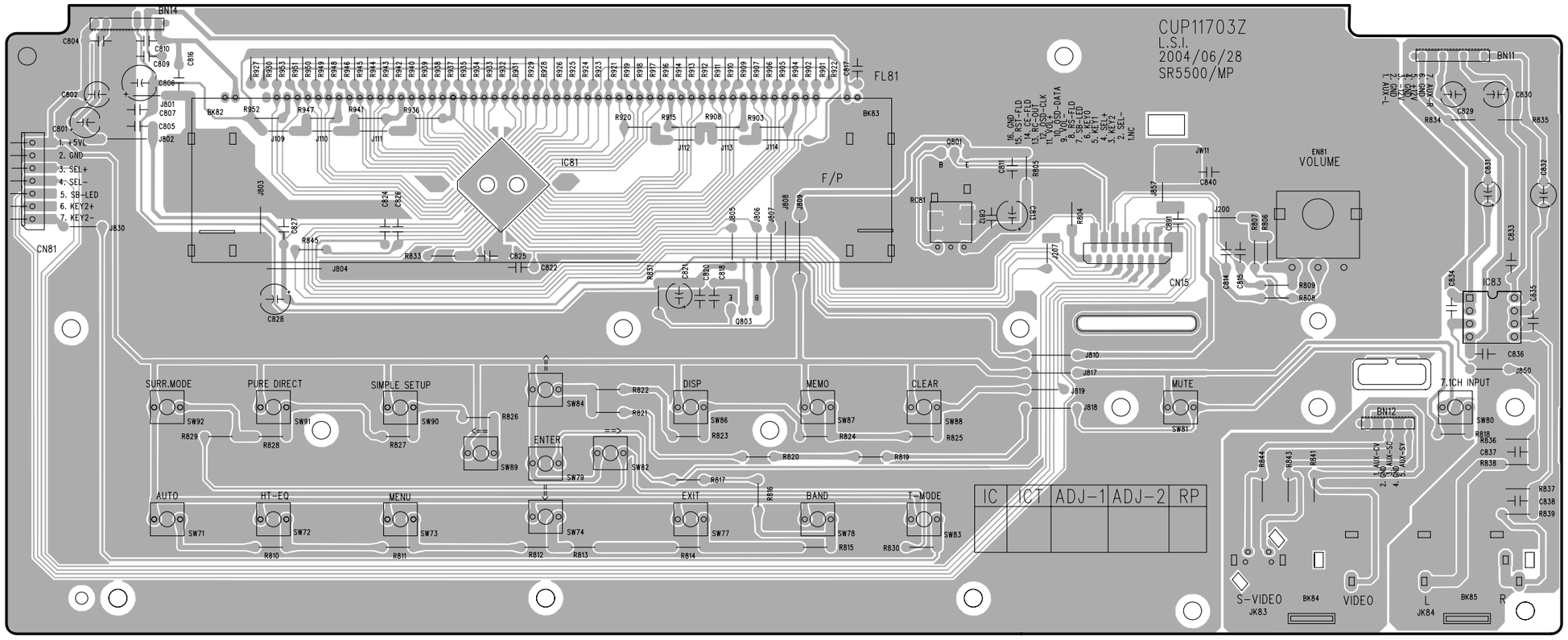


### ENCODER PCB

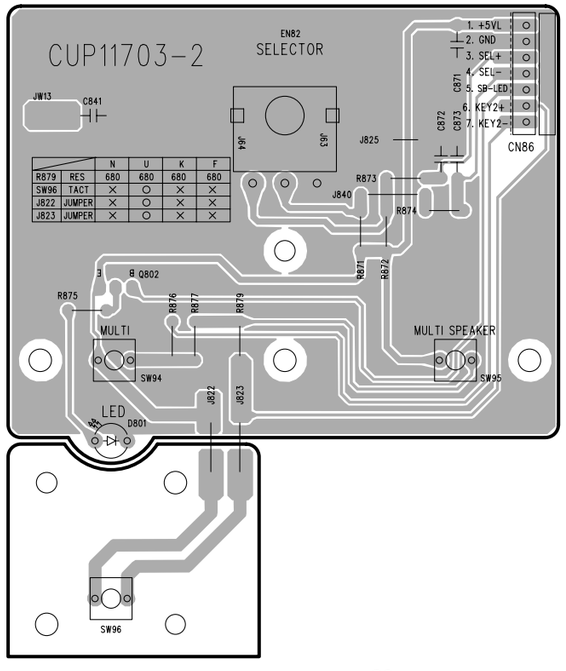


### H/P PCB

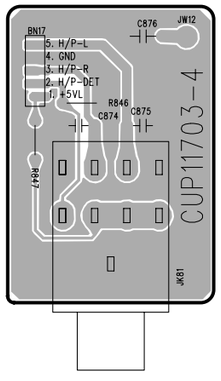


### PUSH S/W PCB

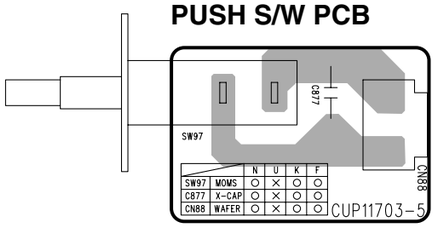

## INPUT PCB

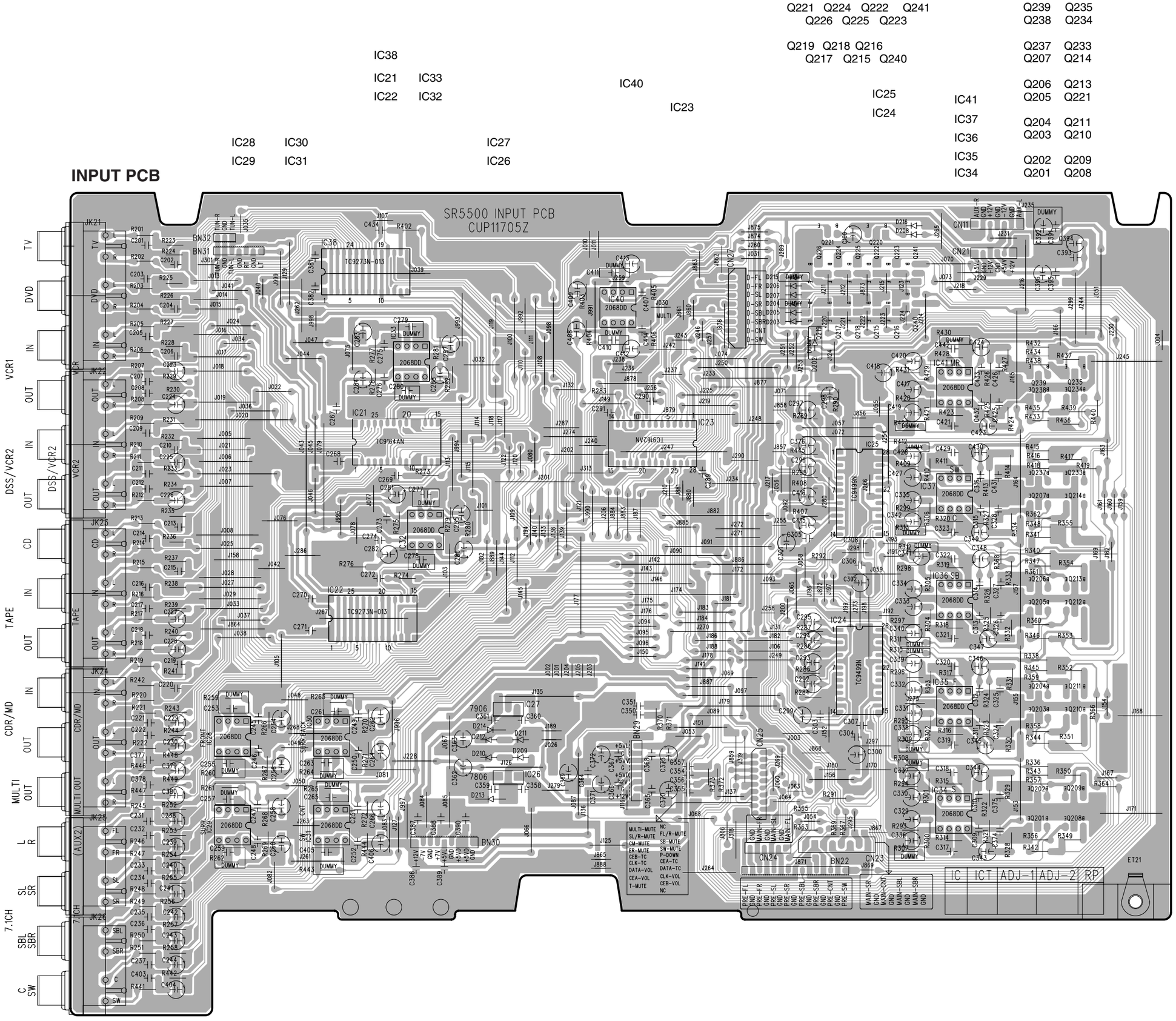
Q221 Q224 Q222 Q241
Q226 Q225 Q223
Q219 Q218 Q216
Q217 Q215 Q240
Q239 Q235
Q238 Q234
Q237 Q233
Q207 Q214
Q206 Q213
Q205 Q221
Q204 Q211
Q203 Q210
Q202 Q209
Q201 Q208
IC38
IC21 IC33
IC22 IC32
IC40
IC23
IC25
IC24
IC41
IC37
IC36
IC35
IC34
IC28 IC30
IC29 IC31
IC27
IC26
SR5500 INPUT PCB
CUP11705Z
TV
DVD
VCR1 IN
OUT
DSS/VCR2 IN
OUT
CD IN
TAPE OUT
CDR/MD IN
OUT
MULTI OUT
L R
SL SR
7.1CH SBL SBR
C SW
IC | ICT | ADJ-1 | ADJ-2 | RP

## DSP PCB A

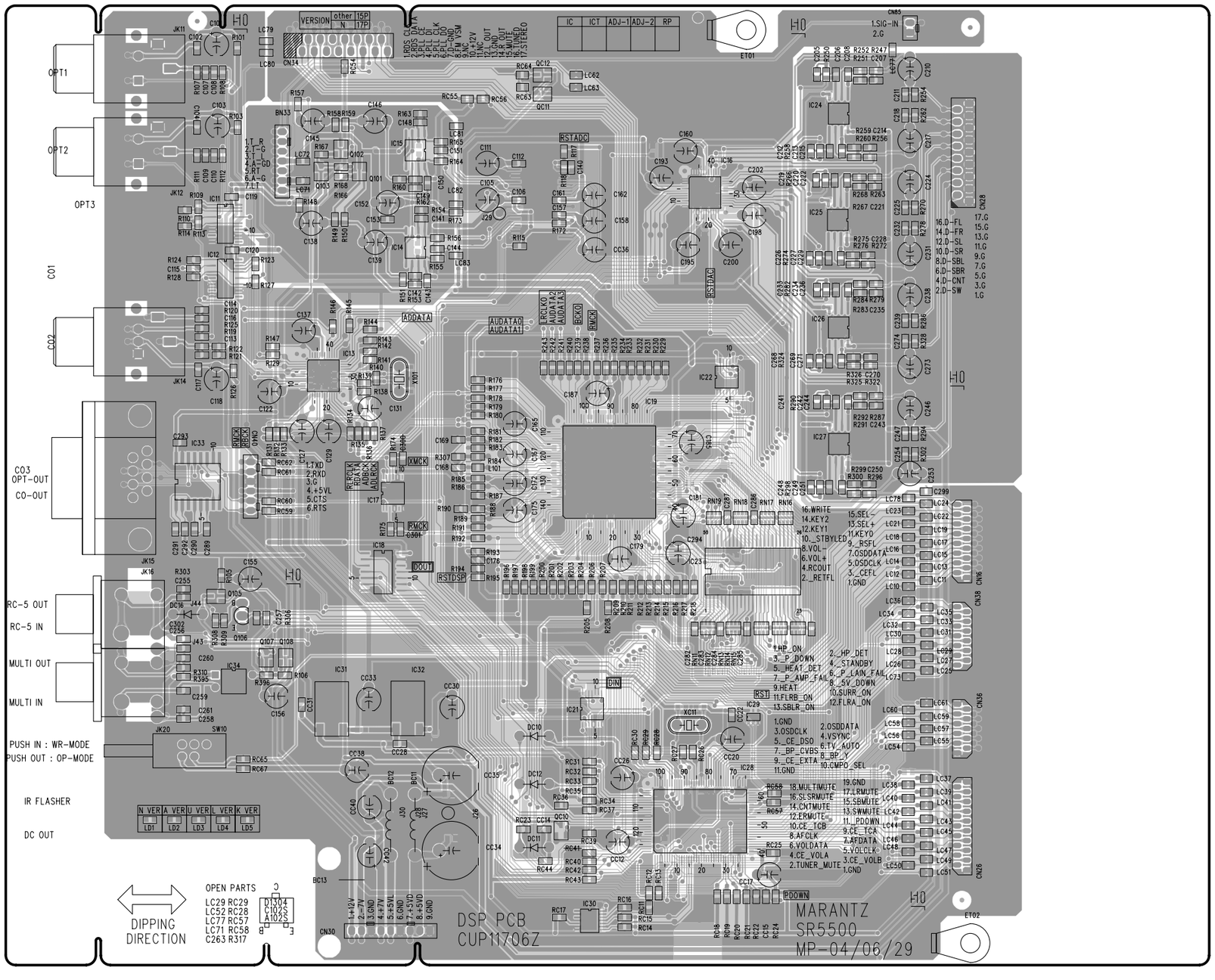
IC11
IC12
IC33
IC13
Q105
IC34
Q106
Q107
Q108
Q102
Q103
Q101
IC15
IC14
IC17
IC16
IC31
IC32
QC12
QC11
IC16
IC22
IC19
IC23
IC21
IC28
QC10
IC30
IC24
IC25
IC26
IC27
OPT1
OPT2
OPT3
CO1
CO2
CO3
OPT-OUT
CO-OUT
RC-5 OUT
RC-5 IN
MULTI OUT
MULTI IN
PUSH IN : WR-MODE
PUSH OUT : OP-MODE
IR FLASHER
DC OUT
DIPPING DIRECTION
OPEN PARTS
LC29 RC29
LC52 RC28
LC77 RC57
LC71 RC58
C263 R317
DSP PCB
CUP11706Z
MARANTZ
SR5500
MP-04/06/29

IC35

IC20

## DSP PCB B

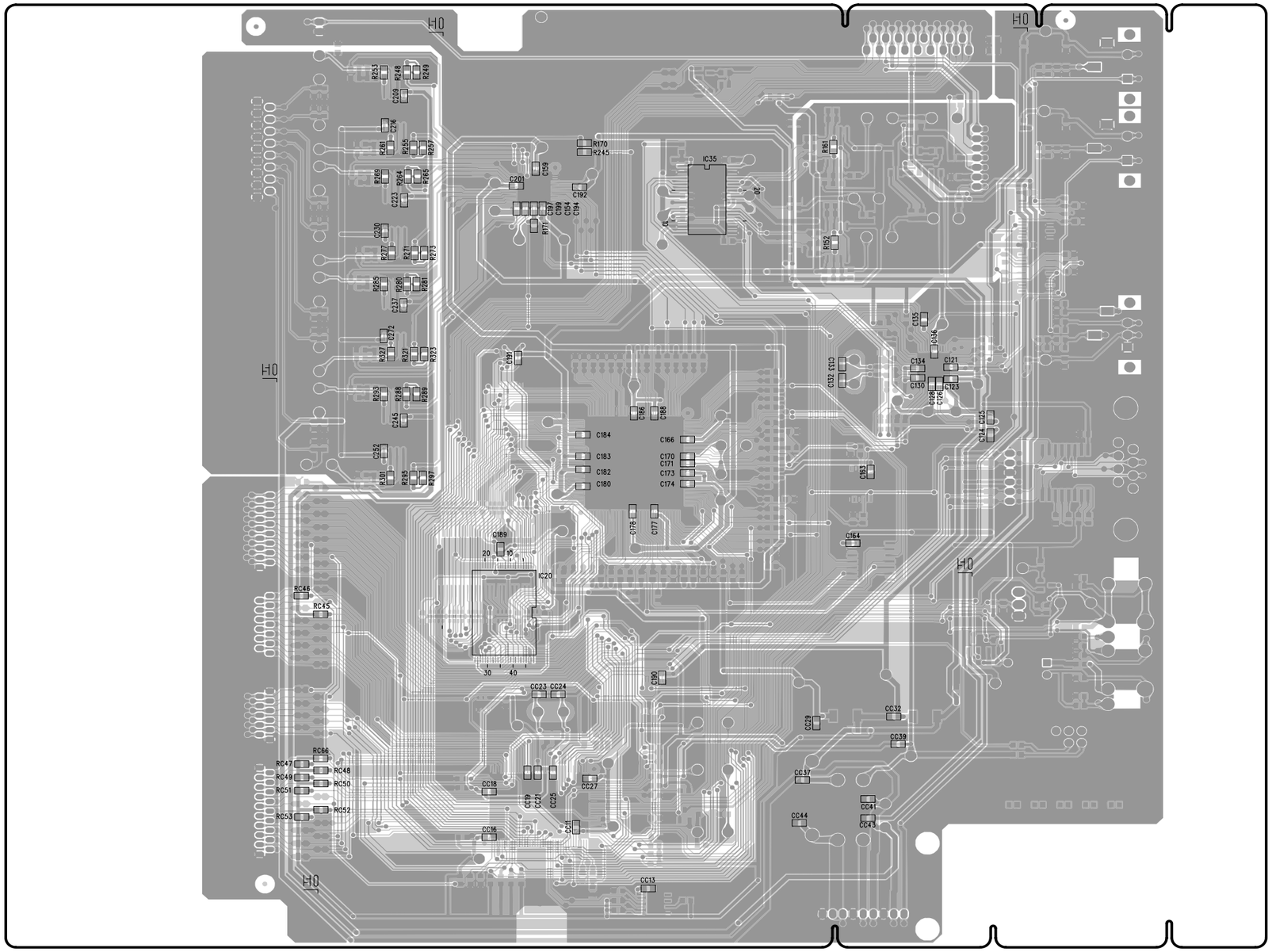

IC14 Q106 Q110 IC13

Q104 Q108

IC11

Q100 IC16

Q101 IC12

## CONVERTER PCB A

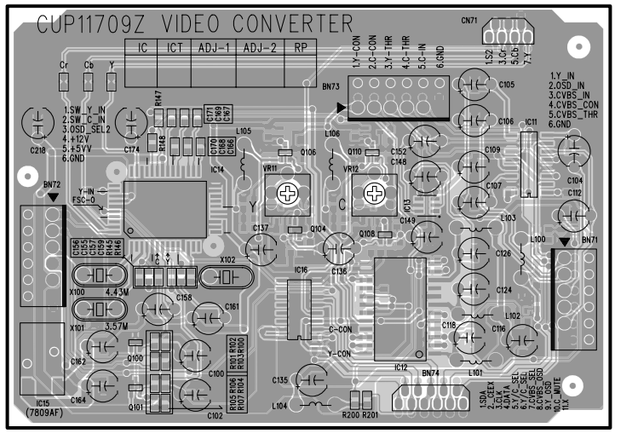


Q111 Q107

Q105

Q102 Q109

Q103

## CONVERTER PCB B

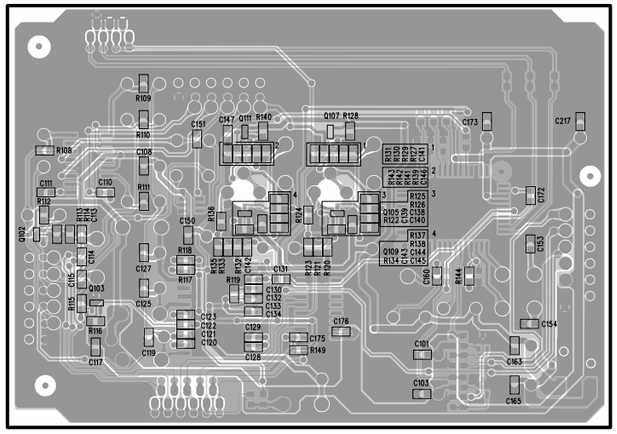

## VIDEO PCB

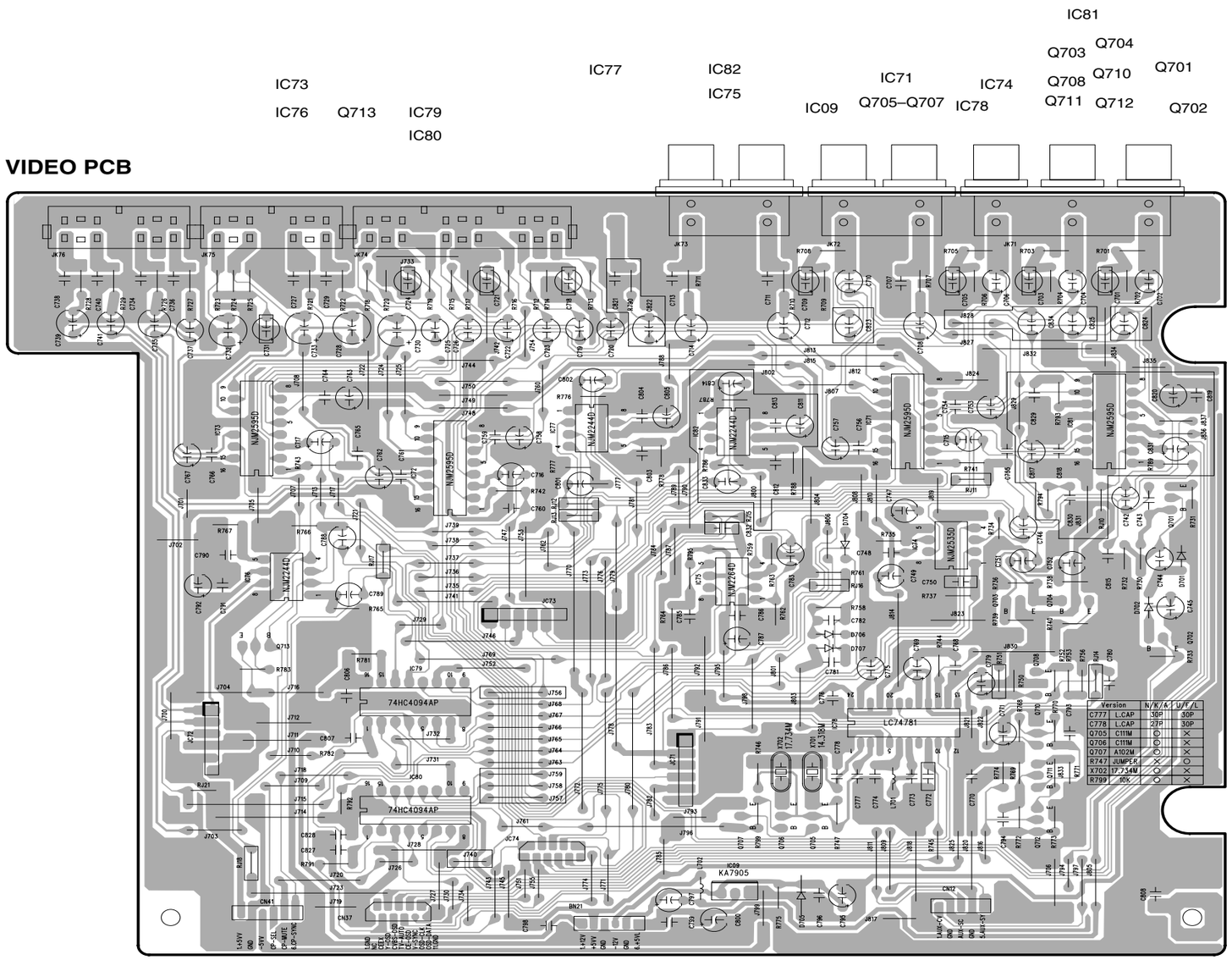


Q901 Q902

## COMPONENT PCB

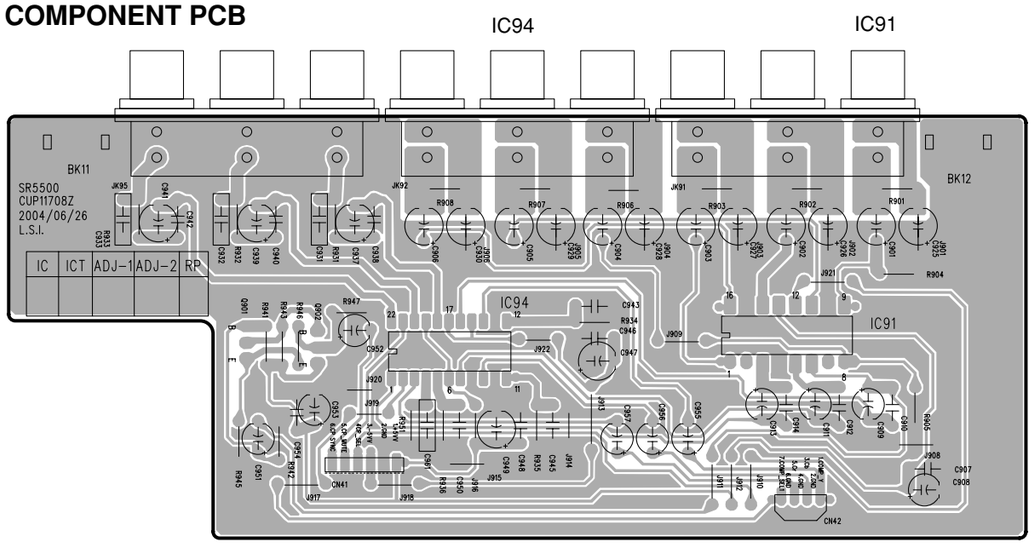


## 7.1CH PREOUT PCB

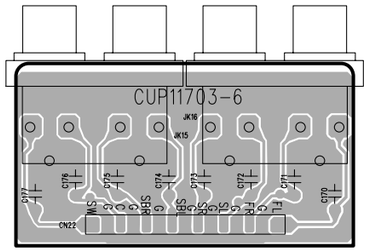

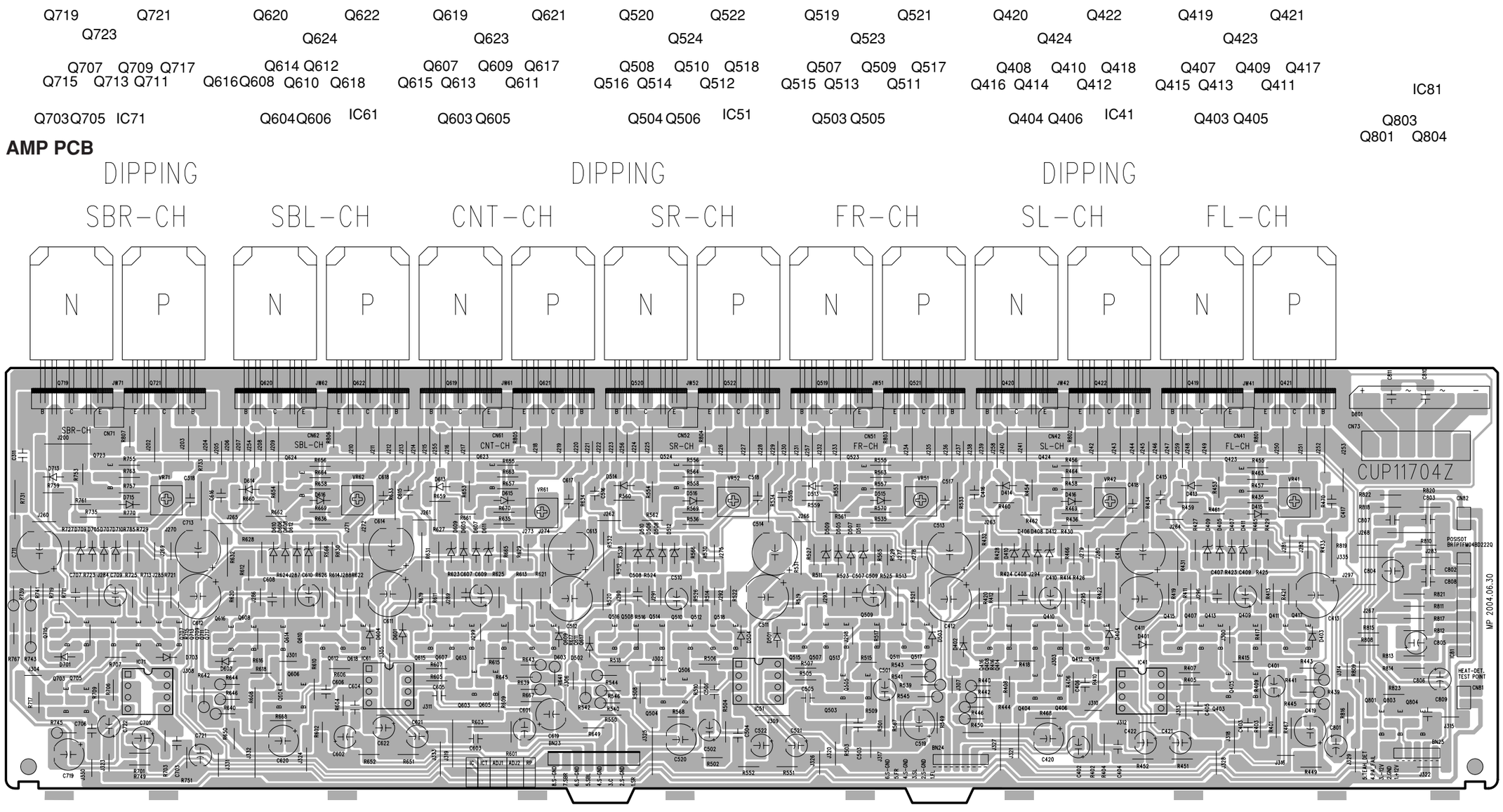
Q719 Q721 Q620 Q622 Q619 Q621 Q520 Q522 Q519 Q521 Q420 Q422 Q419 Q421
Q723 Q624 Q623 Q524 Q523 Q424 Q423
Q707 Q709 Q717 Q614 Q612 Q607 Q609 Q617 Q508 Q510 Q518 Q507 Q509 Q517 Q408 Q410 Q418 Q407 Q409 Q417
Q715 Q713 Q711 Q616 Q608 Q610 Q618 Q615 Q613 Q611 Q516 Q514 Q512 Q515 Q513 Q511 Q416 Q414 Q412 Q415 Q413 Q411
IC81
Q703 Q705 IC71 Q604 Q606 IC61 Q603 Q605 Q504 Q506 IC51 Q503 Q505 Q404 Q406 IC41 Q403 Q405
Q803
Q801 Q804
AMP PCB
DIPPING
DIPPING
DIPPING
SBR-CH
SBL-CH
CNT-CH
SR-CH
FR-CH
SL-CH
FL-CH
N
P
N
P
N
P
N
P
N
P
N
P
N
P
CUP11704Z
MP 2004.06.30

Q805

IC84 IC85 Q804

## ST-BY PCB

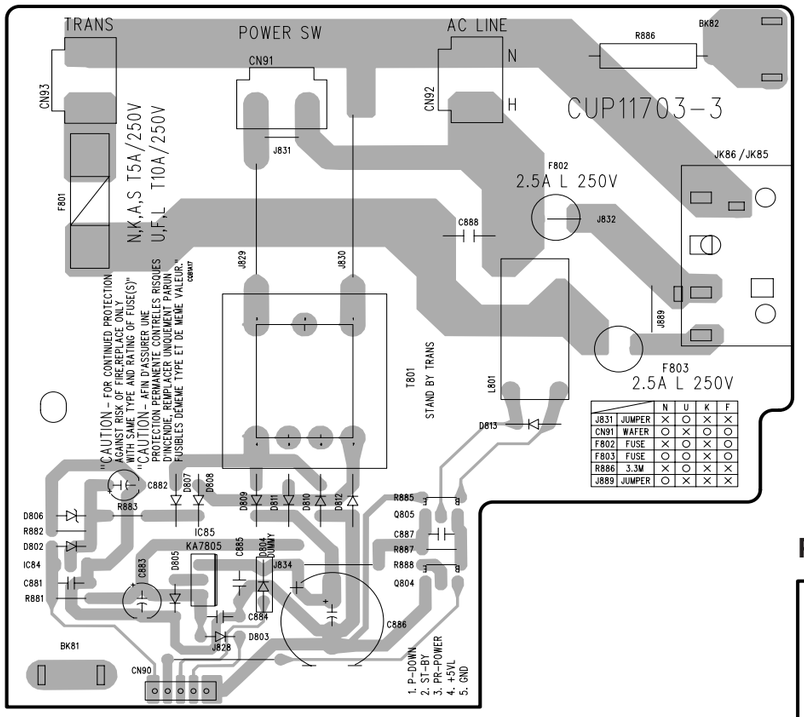


| | N | U | K | F |
|---|---|---|---|---|
| J831 JUMPER | × | ○ | × | × |
| CN91 WAFER | ○ | × | ○ | ○ |
| F802 FUSE | × | ○ | × | ○ |
| F803 FUSE | ○ | ○ | × | ○ |
| R886 3.3M | × | ○ | × | × |
| J889 JUMPER | ○ | × | × | × |

IC61
IC62
IC63
IC64

Q609 Q603
Q610 Q601
Q604 Q602
Q608
Q607
Q606

Q611 Q614
Q612 Q613 Q615

## POWER PCB

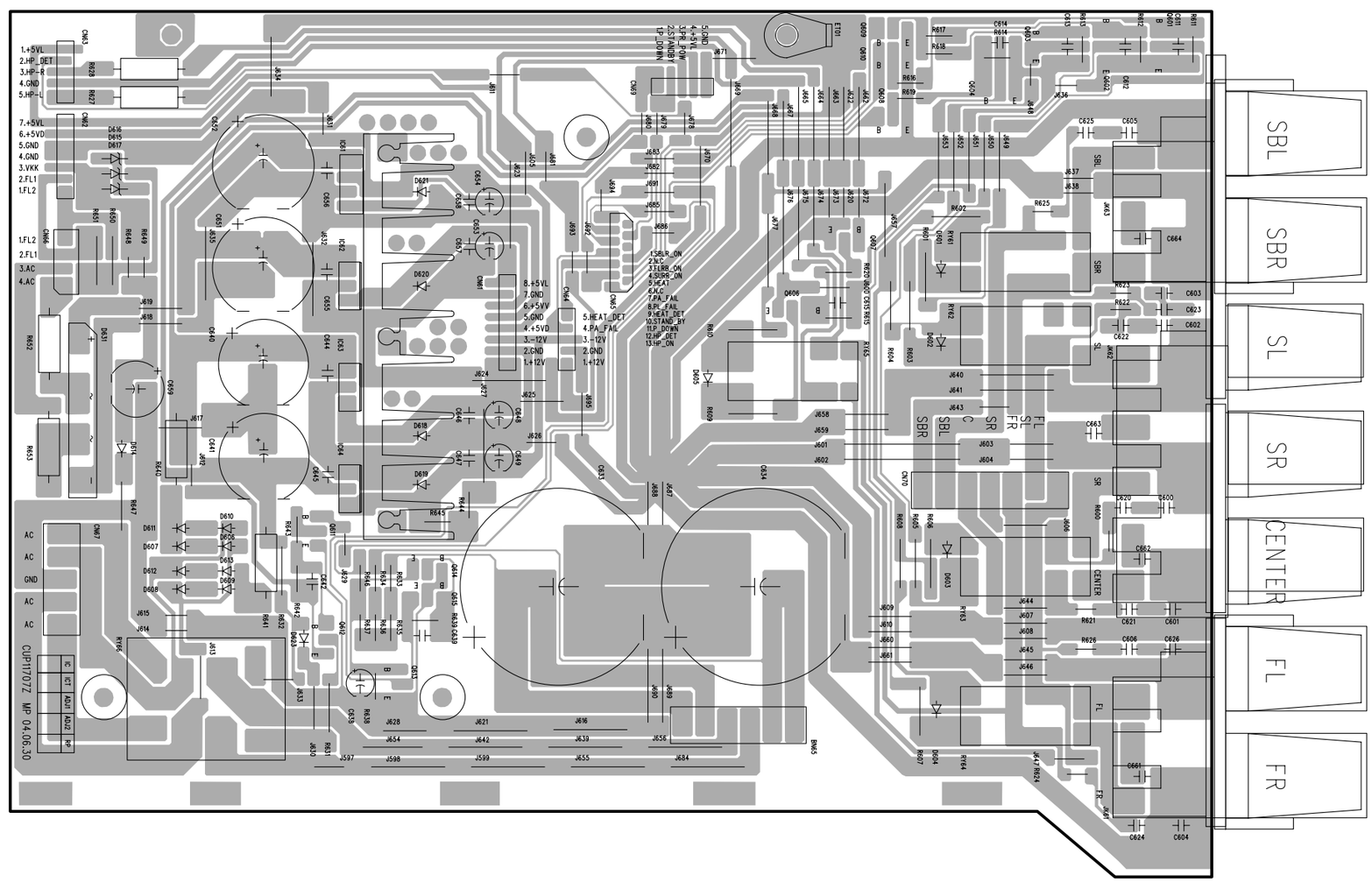

# 11. IC DATA

**IC21: TC9162,3,4**

**PIN CONNECTION** (TOP VIEW)

TC9162AN / AF

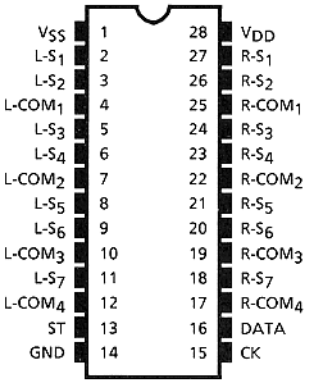


TC9163AN / AF

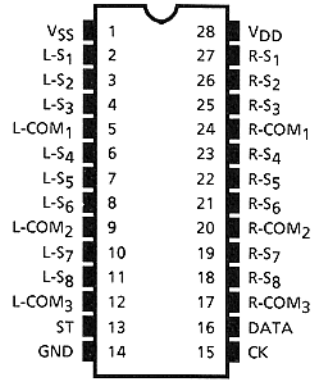


TC9164AN / AF

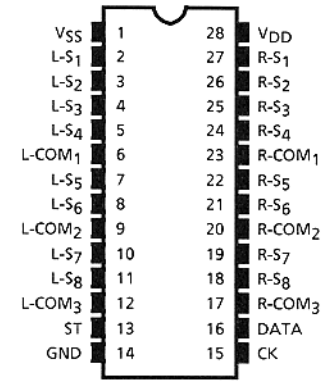


**BLOCK DIAGRAM**

TC9162AN / AF

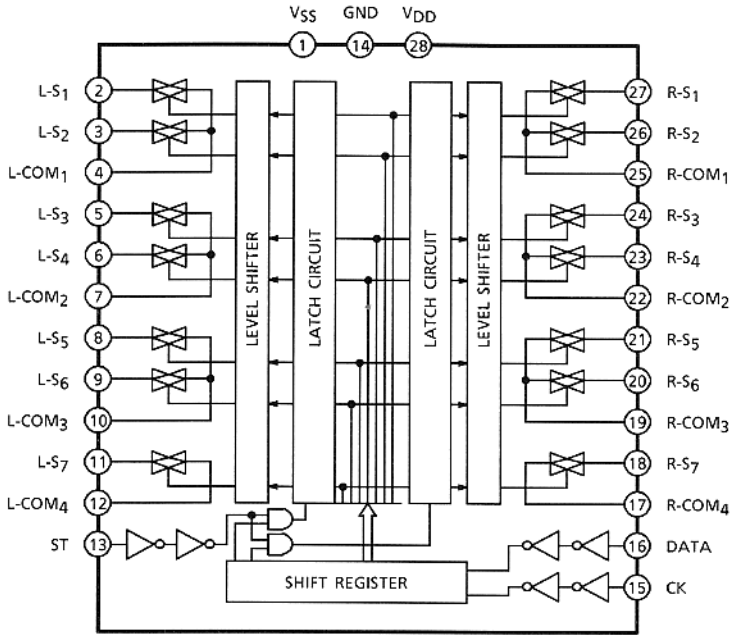

TC9163AN / AF

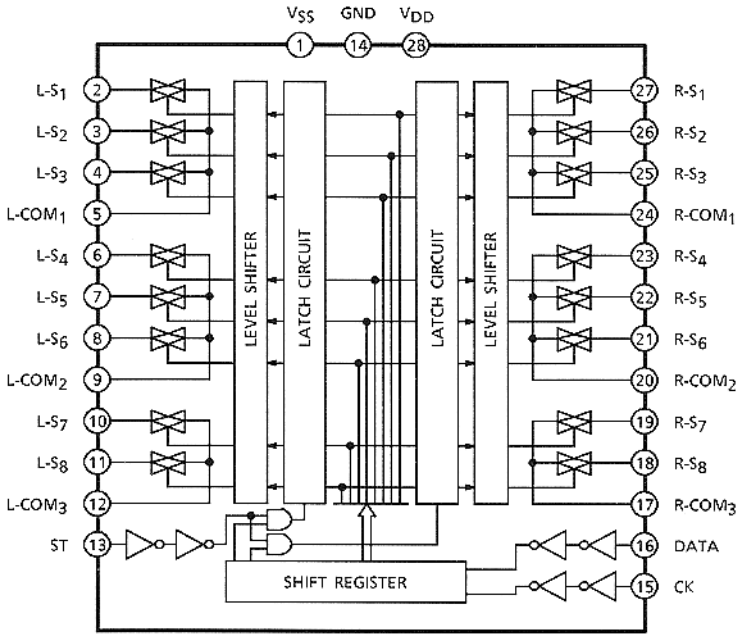


TC9164AN / AF

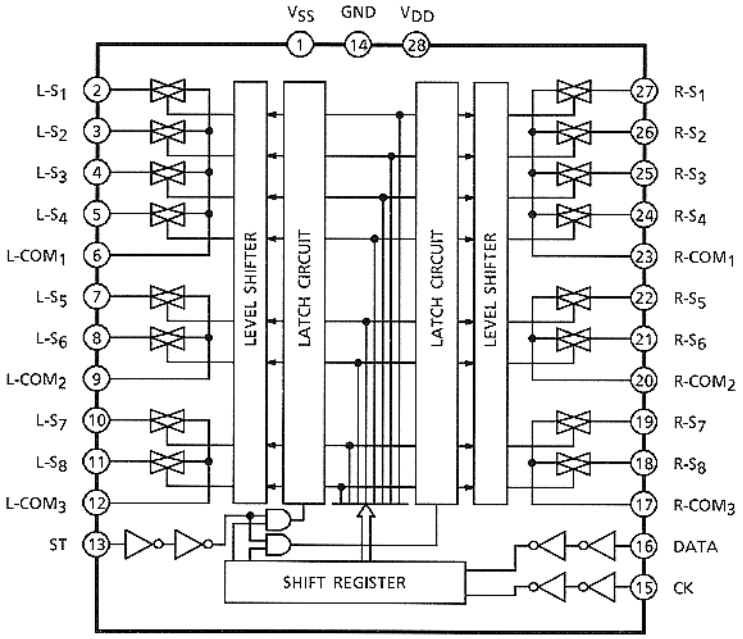

## IC22: TC9273

**BLOCK DIAGRAM**

TC9273N, TC9273F

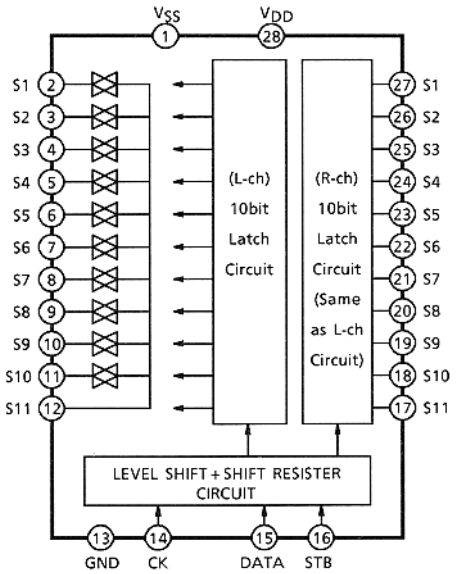


**PIN CONNECTION** (TOP VIEW)

TC9273N, TC9273F

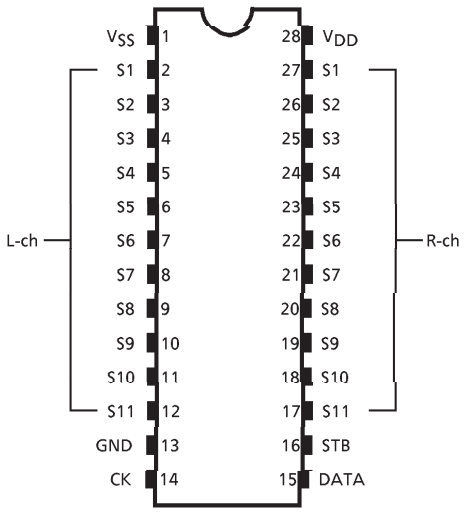


## IC24-TC9499

○TC9499N／F

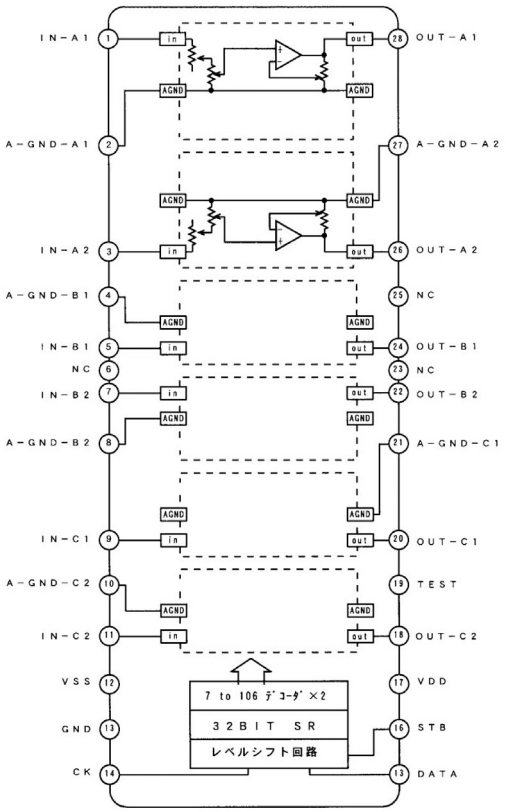

**IC12: TC90A49F**

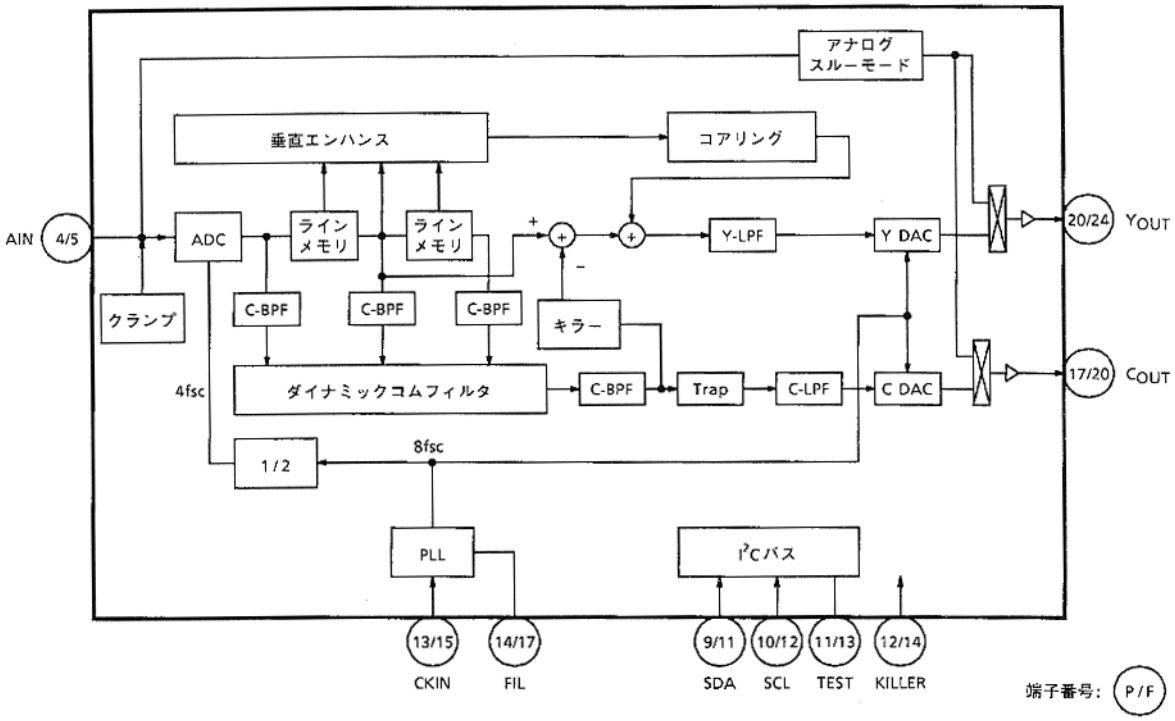


TC90A49P

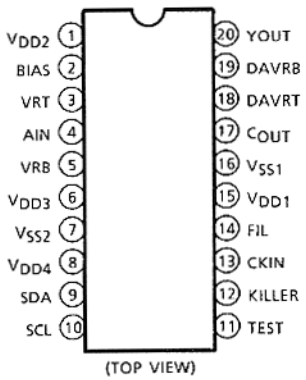


TC90A49F

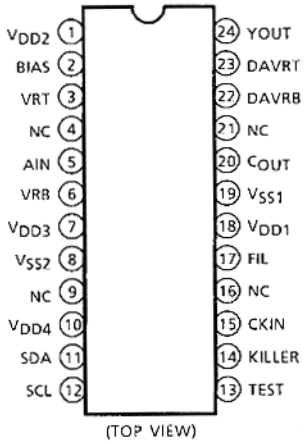

## IC14: TA1270BF

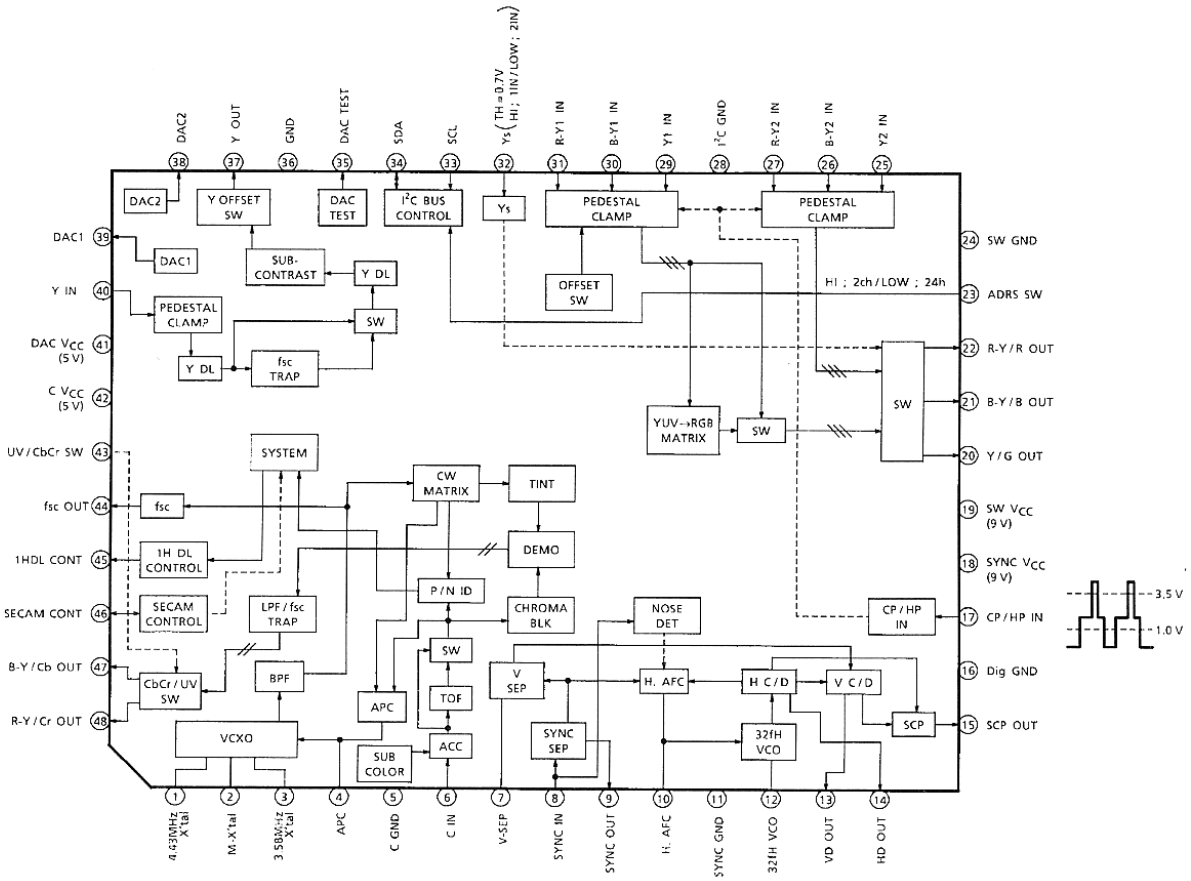

**IC35: CS5361**

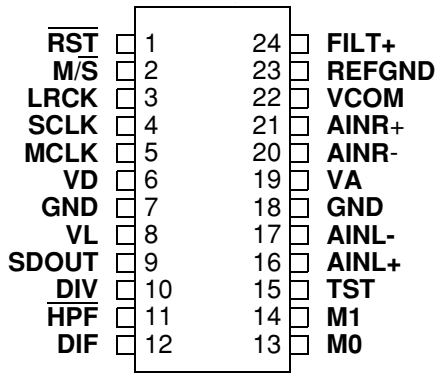


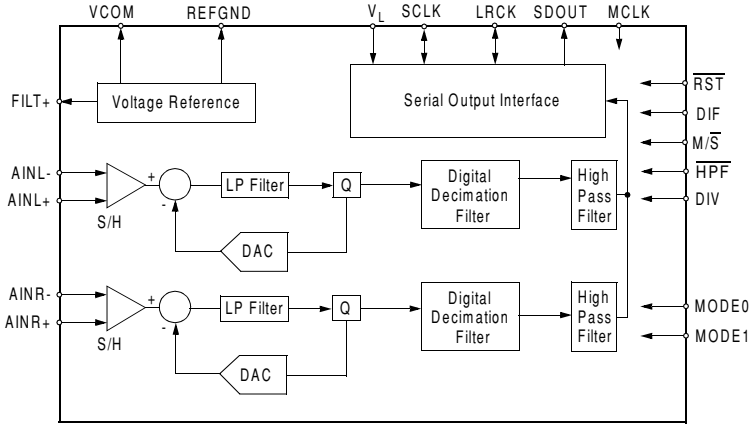


| Pin Name | I/O | # | Pin Description |
|---|---|---|---|
| **RST** | I | 1 | **Reset** (*Input*) - The device enters a low power mode when low. |
| **M/S** | I | 2 | **Master/Slave Mode** *(Input)* -In Slave mode, LRCK and SCLK become input. **(FIXED LOW)** |
| **LRCK** | I | 3 | **Left Right Clock** (*Input* ) - Determines which channel, Left or Right, is currently active on the serial audio data line. The frequency of the left/right clock must be at the audio sample rate, Fs. |
| **SCLK** | I | 4 | **Serial Clock** (*Input* ) - Serial clock for the serial audio interface. |
| **MCLK** | I | 5 | **Master Clock** (*Input* ) - Clock source for the delta-sigma modulator and digital filters. Table 1 illustrates several standard audio sample rates and the required master clock frequency. |
| **VD** | I | 6 | **Digital Power** (*Input* ) **-** Positive power supply for the digital section. Refer to the Recommended Operating Conditions for appropriate voltages. |
| **GND** | I | 7,18 | **Ground** (*Input*) - Ground reference. Must be connected to analog ground. |
| **VL** | I | 8 | **Logic Power** (*Input*) **-** Determines the required signal level for the digital input/output. Refer to the Recommended Operating Conditions for appropriate voltages. |
| **SDOUT** | O | 9 | **Serial Audio Data Output** (*Output*) - Output for two's complement serial audio data. |
| **DIV** | I | 10 | **MCLK Divider** *(Input)* **- (FIXED LOW)** |
| **HPF** | I | 11 | **High Pass Filter Enable** *(Input)* **-** The device includes a high pass filter after the decimator to remove the indeterminate DC offsets introduced by the analog buffer stage and the analog modulator. The first-order high pass filter response characteristics are detailed in the Digital Filter specifications table. The filter response scales linearly with sample rate. |
| **DIF** | I | 12 | **Digital Interface Format** (*Input*) - The required relationship between the Left/Right clock, serial clock and serial data is defined by the Digital Interface Format selection. Refer to Figures 8 and 9. |
| **M0**<br>**M1** | I<br>I | 13,<br>14 | **Mode Selection** (*Input*) -**(FIXED LOW)**<br>**(FIXED LOW)** |
| **TST** | I | 15 | **Test Pin** *(Input)* **-** This pin needs to be connected to GND. |
| **AINL+**<br>**AINL-** | I<br>I | 16,<br>17 | **Differential Left Channel Analog Input** (*Input*) - Signals are presented differentially to the delta-sigma modulators via the AINL+/- pins. The full scale differential analog input level is specified in the Analog Characteristics Specification table. |
| **VA** | I | 19 | **Analog Power** (*Input*) **-** Positive power supply for the analog section. Refer to the Recommended Operating Conditions for appropriate voltages. |
| **AINR+**<br>**AINR-** | I<br>I | 20,<br>21 | **Differential Right Channel Analog Input** (*Input*) -Signals are presented differentially to the delta-sigma modulators via the AINR+/- pins. The full scale differential analog input level is specified in the Analog Characteristics Specification table. |
| **VCOM** | O | 22 | **Common Mode Voltage** *(Output)* **-** Nominally 2.5 volts; can be used to bias the analog input circuitry to the common mode voltage of the CS5361. VCOM is not buffered and the maximum current is 10 uA. |
| **REF_GND** | I | 23 | **Reference Ground** (*Input*) - Ground reference for the internal sampling circuits and must be connected to analog ground. |
| **FILT+** | O | 24 | **Positive Voltage Reference** (*Output*) **-** Positive reference voltage for the internal sampling circuits. Requires the capacitive decoupling to GND as shown in the Typical Connection Diagram. |

**IC16: CS4382**

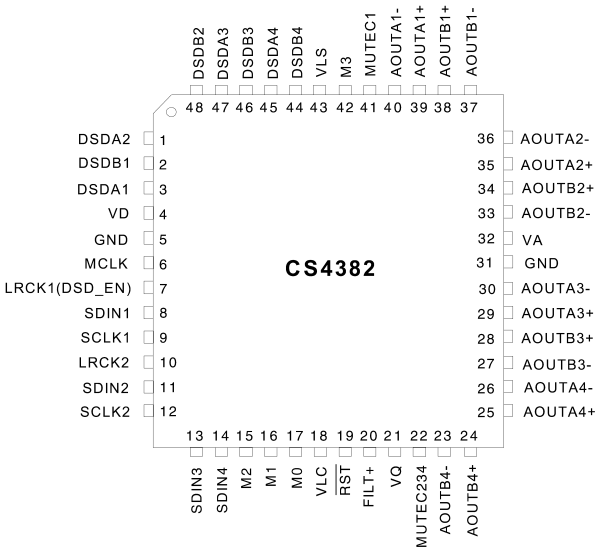


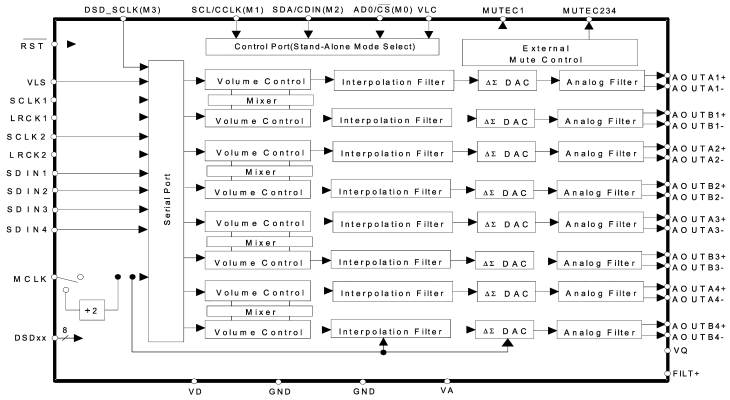


| Pin Name | I/O | # | |
|---|---|---|---|
| **VD** | I | 4 | **Digital Power** (*Input*) **-** Positive power supply for the digital section. Refer to the Recommended Operating Conditions for appropriate voltages. |
| **GND** | I<br>I | 5<br>31 | **Ground** (*Input*) - Ground reference. Should be connected to analog ground. |
| **MCLK** | I | 6 | **Master Clock** (*Input*) - Clock source for the delta-sigma modulator and digital filters. Table 5 illustrates several standard audio sample rates and the required master clock frequency. |
| **LRCK1**<br>**LRCK2** | I<br>I | 7<br>10 | **Left Right Clock** (*Input*) - Determines which channel, Left or Right, is currently active on the serial audio data line. The frequency of the left/right clock must be at the audio sample rate, Fs. |
| **SDIN1**<br>**SDIN2**<br>**SDIN3**<br>**SDIN4** | I<br>I<br>I<br>I | 8<br>11<br>13<br>14 | **Serial Audio Data Input** (*Input*) - Input for two's complement serial audio data. |
| **SCLK1**<br>**SCLK2** | I<br>I | 9<br>12 | **Serial Clock** (*Input*) - Serial clock for the serial audio interface. |
| **VLC** | I | 18 | **Control Port Power** (*Input*) **-** Determines the required signal level for the control port. Refer to the Recommended Operating Conditions for appropriate voltages. |
| **$\overline{\text{RST}}$** | I | 19 | **Reset** (*Input*) - The device enters a low power mode and all internal registers are reset to their default settings when low. |
| **FILT+** | I | 20 | **Positive Voltage Reference** (*Output*) **-** Positive reference voltage for the internal sampling circuits. Requires the capacitive decoupling to analog ground, as shown in the Typical Connection Diagram. |
| **VQ** | I | 21 | **Quiescent Voltage** (*Output*) - Filter connection for internal quiescent voltage. VQ must be capacitively coupled to analog ground, as shown in the Typical Connection Diagram. The nominal voltage level is specified in the Analog Characteristics and Specifications section. VQ presents an appreciable source impedance and any current drawn from this pin will alter device performance. However, VQ can be used to bias the analog circuitry assuming there is no AC signal component and the DC current is less than the maximum specified in the Analog Characteristics and Specifications section. |

**IC16: CS4382**

| Pin Name | I/O | # | |
|---|---|---|---|
| **MUTEC1**<br>**MUTEC234** | O<br>O | 41<br>22 | **Mute Control** (*Output*) - The Mute Control pins go high during power-up initialization, reset, muting, power-down or if the master clock to left/right clock frequency ratio is incorrect. These pins are intended to be used as a control for external mute circuits to prevent the clicks and pops that can occur in any single supply system. The use of external mute circuits are not mandatory but may be desired for designs requiring the absolute minimum in extraneous clicks and pops. |
| **AOUTA1 +,-**<br>**AOUTB1 +,-**<br>**AOUTA2 +,-**<br>**AOUTB2 +,-**<br>**AOUTA3 +,-**<br>**AOUTB3 +,-**<br>**AOUTA4 +,-**<br>**AOUTB4 +,-** | O<br>O<br>O<br>O<br>O<br>O<br>O<br>O | 39, 40<br>38, 37<br>35, 36<br>34, 33<br>29, 30<br>28, 27<br>25, 26<br>24, 23 | **Differential Analog Output** (*Output*) - The full scale differential analog output level is specified in the Analog Characteristics specification table. |
| **VA** | I | 32 | **Analog Power** (*Input*) **-** Positive power supply for the analog section. Refer to the Recommended Operating Conditions for appropriate voltages. |
| **VLS** | I | 43 | **Serial Audio Interface Power** (*Input*) **-** Determines the required signal level for the serial audio interface. Refer to the Recommended Operating Conditions for appropriate voltages. |
| **Stand-Alone Definitions** | | | |
| **M0** | | 17 | **Mode Selection** (*Input*) - Determines the operational mode of the device as detailed in Tables 6 and 7. |
| **M1** | | 16 | **FIXED GND** |
| **M2** | | 15 | **FIXED GND** |
| **M3** | | 42 | |
| **DSD Definitions** | | | |
| **DSDA1** | | 3 | **FIXED GND** |
| **DSDB1** | | 2 | **FIXED GND** |
| **DSDA2** | | 1 | **FIXED GND** |
| **DSDB2** | | 48 | **FIXED GND** |
| **DSDA3** | | 47 | **FIXED GND** |
| **DSDB3** | | 46 | **FIXED GND** |
| **DSDA4** | | 45 | **FIXED GND** |
| **DSDB4** | | 44 | **FIXED GND** |

## IC19: CS49403

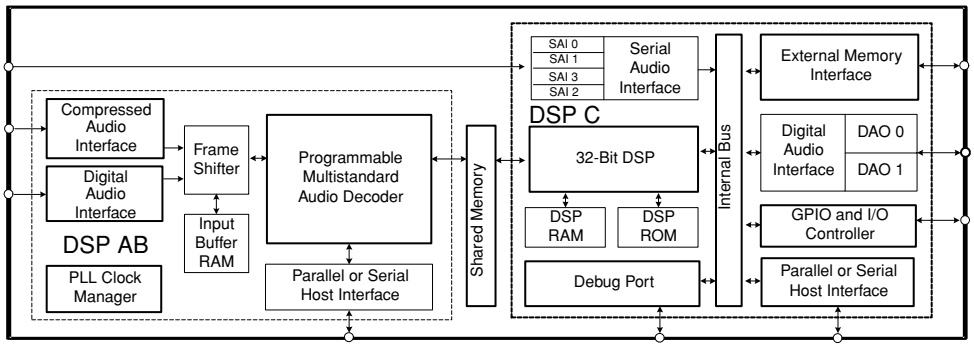


| Pin No. | I/O | Function | Description |
|---|---|---|---|
| 1 | I/O | UHS0, GPIO18 | Mode Select Bit 0, General Purpose I/O |
| 2 | I/O | UHS1, GPIO19 | Mode Select Bit 1, General Purpose I/O |
| 3 | | $\overline{\text{INTREQ}}$ | Control Port Interrupt Request |
| 4 | I | FA1, FSCDIN | Host Address Bit One or SPI Serial Control Data Input |
| 5 | I/O | GPIO20 | General Purpose I/O |
| 6 | I | FA0, FSCCLK | Host Parallel Address Bit Zero or Serial Control Port Clock |
| 7 | I/O | FHS2, FSCDIO, FSCDOUT | Mode Select Bit 2 or Serial Control Port Data Input and Output, Parallel Port Type Select |
| 8 | I/O | GPIO21 | General Purpose I/O |
| 9 | | FDAT7 | DSP AB Bidirectional Data Bus |
| 10 | | VDD6 | 2.5V Supply Voltage |
| 11 | | VSS6 | 2.5V Ground |
| 12 | | FHS0, $\overline{\text{FWR}}$, $\overline{\text{FDS}}$ | Mode Select Bit 0 or Host Write Strobe or Host Data Strobe |
| 13 | O | FHS1, $\overline{\text{FRD}}$, FR/$\overline{\text{W}}$ | Mode Select Bit 1 or Host Parallel Output Enable or Host Parallel R/$\overline{\text{W}}$ |
| 14 | | FDAT6 | DSP AB Bidirectional Data Bus |
| 15 | I | $\overline{\text{FCS}}$ | Host Parallel Chip Select, Host Serial SPI Chip Select |
| 16 | O | $\overline{\text{FINTREQ}}$ | Control Port Interrupt Request |
| 17 | | FDBCK | Reserved |
| 18 | | FDAT5 | DSP AB Bidirectional Data Bus |
| 19 | | FDAT4 | DSP AB Bidirectional Data Bus |
| 20 | | VDD7 | 2.5V Supply Voltage |
| 21 | | VSS7 | 2.5V Ground |
| 22 | | FDAT3 | DSP AB Bidirectional Data Bus |
| 23 | | FDBDA | Reserved |
| 24 | | FDAT2 | DSP AB Bidirectional Data Bus |
| 25 | | DBDA | Debug Data |
| 26 | | DBCK | Debug Clock |
| 27 | | FDAT1 | DSP AB Bidirectional Data Bus |
| 28 | | TEST | Reserved |
| 29 | | FDAT0 | DSP AB Bidirectional Data Bus |
| 30 | I/O | $\overline{\text{NV_WE}}$, GPIO16 | SRAM Write Enable, General Purpose I/O |
| 31 | I/O | $\overline{\text{NV_OE}}$, GPIO15 | SRAM Output Enable, General Purpose I/O |
| 32 | I/O | $\overline{\text{NV_CS}}$, GPIO14 | SRAM Chip Select, General Purpose I/O |
| 33 | | SD_WE | SDRAM Write Enable |
| 34 | | SD_DATA0, EXTD0 | SDRAM Data Bus, SRAM External Data Bus |
| 35 | | SD_DATA1, EXTD1 | SDRAM Data Bus, SRAM External Data Bus |
| 36 | | SD_DATA2, EXTD2 | SDRAM Data Bus, SRAM External Data Bus |
| 37 | | SD_DATA3, EXTD3 | SDRAM Data Bus, SRAM External Data Bus |
| 38 | | SD_DATA4, EXTD4 | SDRAM Data Bus, SRAM External Data Bus |
| 39 | | SD_DQM0 | SDRAM Data Mask 2 |
| 40 | | SD_DATA5, EXTD5 | SDRAM Data Bus, SRAM External Data Bus |
| 41 | | VSSSD4 | 3.3V SDRAM/SRAM/EPROM Interface Ground |
| 42 | | VDDSD4 | 3.3V SDRAM/SRAM/EPROM Interface Supply |
| 43 | | SD_DATA6, EXTD6 | SDRAM Data Bus, SRAM External Data Bus |
| 44 | | SD_DATA7, EXTD7 | SDRAM Data Bus, SRAM External Data Bus |
| 45 | | SD_DQM1 | SDRAM Data Mask 1 |
| 46 | | SD_DATA15, EXTA18 | SDRAM Data Bus, SRAM External Address Bus |
| 47 | | SD_DATA14, EXTA17 | SDRAM Data Bus, SRAM External Address Bus |
| 48 | | NC5 | No Connect |
| 49 | | SD_DATA13, EXTA16 | SDRAM Data Bus, SRAM External Address Bus |
| 50 | | VSSSD3 | 3.3V SDRAM/SRAM/EPROM Interface Ground |
| 51 | | VDDSD3 | 3.3V SDRAM/SRAM/EPROM Interface Supply |
| 52 | | SD_DATA12, EXTA15 | SDRAM Data Bus, SRAM External Address Bus |
| 53 | | SD_DATA11, EXTA14 | SDRAM Data Bus, SRAM External Address Bus |
| 54 | | SD_DATA10, EXTA13 | SDRAM Data Bus, SRAM External Address Bus |
| 55 | | SD_DATA9, EXTA12 | SDRAM Data Bus, SRAM External Address Bus |
| 56 | | SD_DATA8, EXTA11 | SDRAM Data Bus, SRAM External Address Bus |
| 57 | | VSSSD2 | 3.3V SDRAM/SRAM/EPROM Interface Ground |
| 58 | | VDDSD2 | 3.3V SDRAM/SRAM/EPROM Interface Supply |
| 59 | O | SD_CLK_OUT | SDRAM Clock Output |
| 60 | | SD_ADDR9, EXTA9 | SDRAM Address Bus, SRAM External Address Bus |
| 61 | I | SD_CLK_IN | SDRAM Re-timing Clock Input |
| 62 | | SD_ADDR8, EXTA8 | SDRAM Address Bus, SRAM External Address Bus |
| 63 | | SD_ADDR7, EXTA7 | SDRAM Address Bus, SRAM External Address Bus |
| 64 | | SD_CLK_EN | SDRAM Clock Enable |
| 65 | | SD_ADDR6, EXTA6 | SDRAM Address Bus, SRAM External Address Bus |
| 66 | | SD_ADDR5, EXTA5 | SDRAM Address Bus, SRAM External Address Bus |
| 67 | | SD_ADDR4, EXTA4 | SDRAM Address Bus, SRAM External Address Bus |
| 68 | | SD_CS | SDRAM Chip Select |
| 69 | | VSSSD1 | 3.3V SDRAM/SRAM/EPROM Interface Ground |
| 70 | | VDDSD1 | 3.3V SDRAM/SRAM/EPROM Interface Supply |
| 71 | | SD_BA, EXTA19 | SDRAM Bank Address Select, SRAM External Address Bus |
| 72 | | SD_ADDR10, EXTA10 | SDRAM Address Bus, SRAM External Address Bus |
| 73 | | SD_ADDR0, EXTA0 | SDRAM Address Bus, SRAM External Address Bus |
| 74 | | SD_ADDR1, EXTA1 | SDRAM Address Bus, SRAM External Address Bus |
| 75 | | SD_ADDR2, EXTA2 | SDRAM Address Bus, SRAM External Address Bus |
| 76 | | SD_ADDR3, EXTA3 | SDRAM Address Bus, SRAM External Address Bus |
| 77 | | SD_RAS | SDRAM Row Address Strobe |
| 78 | | SD_CAS | SDRAM Column Address Strobe |
| 79 | I/O | SDATAN3, GPIO27 | PCM Audio Input Data, General Purpose I/O |
| 80 | I/O | SDATAN2, GPIO26 | PCM Audio Input Data, General Purpose I/O |
| 81 | I/O | SDATAN1, GPIO25 | PCM Audio Input Data, General Purpose I/O |
| 82 | I/O | SDATAN0, GPIO24 | PCM Audio Input Data, General Purpose I/O |
| 83 | | NC4 | No Connect |
| 84 | | NC3 | No Connect |
| 85 | I/O | LRCLKN, GPIO23 | PCM Audio Input Sample Rate Clock, General Purpose I/O |
| 86 | I/O | SCLKN, GPIO22 | PCM Audio Input Bit Clock, General Purpose I/O |
| 87 | O | LRCLK1 | Audio Output Sample Rate Clock |
| 88 | | NC2 | No Connect |
| 89 | | NC1 | No Connect |
| 90 | | VDD1 | 2.5V Supply Voltage |
| 91 | | VSS1 | 2.5V Ground |
| 92 | I/O | AUDATA7, XMT958B, GPIO31 | Digital Audio Output 7, S/PDIF Transmitter, General Purpose I/O |
| 93 | I/O | AUDATA6, GPIO30 | Digital Audio Output 6, General Purpose I/O |
| 94 | I/O | AUDATA5, GPIO29 | Digital Audio Output 5, General Purpose I/O |
| 95 | I/O | HDATA7, GPIO7 | DSP C Bidirectional Data Bus, General Purpose I/O |
| 96 | I/O | HDATA6, GPIO6 | DSP C Bidirectional Data Bus, General Purpose I/O |
| 97 | I/O | HDATA5, GPIO5 | DSP C Bidirectional Data Bus, General Purpose I/O |
| 98 | O | SCLK1 | Audio Output Bit Clock |

| | | | |
|---|---|---|---|
| 99 | | MCLK | Audio Master Clock |
| 100 | | VDD2 | 2.5V Supply Voltage |
| 101 | | VSS2 | 2.5V Ground |
| 102 | I/O | AUDATA4, GPIO28 | Digital Audio Output 4, General Purpose I/O |
| 103 | I/O | HDATA4, GPIO4 | DSP C Bidirectional Data Bus, General Purpose I/O |
| 104 | O | SCLK0 | Audio Output Bit Clock |
| 105 | I/O | HDATA3, GPIO3 | DSP C Bidirectional Data Bus, General Purpose I/O |
| 106 | O | AUDATA3, XMT958A | Digital Audio Output 3, S/PDIF Transmitter |
| 107 | O | AUDATA2 | Digital Audio Output 2 |
| 108 | O | LRCLK0 | Audio Output Sample Rate Clock |
| 109 | O | AUDATA1 | Digital Audio Output 1 |
| 110 | O | AUDATA0 | Digital Audio Output 0 |
| 111 | I | CMPCLK, FSCLKN2 | PCM Audio Input Bit Clock |
| 112 | I/O | HDATA2, GPIO2 | DSP C Bidirectional Data Bus, General Purpose I/O |
| 113 | | VSS3 | 2.5V Ground |
| 114 | | VDD3 | 2.5V Supply Voltage |
| 115 | I/O | HDATA1, GPIO1 | DSP C Bidirectional Data Bus, General Purpose I/O |
| 116 | I/O | HDATA0, GPIO0 | DSP C Bidirectional Data Bus, General Purpose I/O |
| 117 | O | CMPREQ, FLRCLKN2 | Frame Clock Data Request Out |
| 118 | I | CMPDAT, FSDATAN2 | PCM Audio Data Input Number Two |
| 119 | I | FLRCLKN1 | PCM Audio Input Sample Rate Clock |
| 120 | I/O | $\overline{WR}$, $\overline{DS}$, GPIO10 | Host Write Strobe, Host Data Strobe, General Purpose I/O |
| 121 | I/O | $\overline{RD}$, R/$\overline{W}$, GPIO11 | Host Parallel Output Enable, Host Parallel R/W, General Purpose I/O |
| 122 | | PLLVSS | PLL Ground Voltage |
| 123 | | FILT2 | Phase Locked Loop Filter |
| 124 | | FILT1 | Phase-Locked Loop Filter |
| 125 | | PLLVDD | PLL Supply Voltage |
| 126 | O | CLKOUT, XTALO | Crystal Oscillator Output |
| 127 | I | CLKIN, XTALI | External Clock Input/Crystal Oscillator Input |
| 128 | | CLKSEL | DSP Clock Select |
| 129 | I/O | $\overline{CS}$, GPIO9 | Host Parallel Chip Select, General Purpose I/O |
| 130 | I/O | A0, GPIO13 | Host Parallel Address Bit 0, General Purpose I/O |
| 131 | I | FSDATAN1 | PCM Audio Data Input One |
| 132 | | VDD4 | 2.5V Supply Voltage |
| 133 | | VSS4 | 2.5V Ground |
| 134 | I | FSCLKN1, STCCLK2 | PCM Audio Input Bit Clock |
| 135 | | $\overline{SCS}$ | Host Serial SPI Chip Select |
| 136 | I | SCDIN | SPI Serial Control Data Input |
| 137 | | VSS5 | 2.5V Ground |
| 138 | | VDD5 | 2.5V Supply Voltage |
| 139 | I/O | A1, GPIO12 | Host Address Bit 1, General Purpose I/O |
| 140 | I/O | SCDOUT, SCDIO | Serial Control Port Data Input and Output |
| 141 | I/O | HINBSY, GPIO8 | Input Host Message Status, General Purpose I/O |
| 142 | | SCCLK | Serial Control Port Clock |
| 143 | I/O | UHS2, CS_OUT, GPIO17 | Mode Select Bit 2, External Serial Memory Chip Select, General Purpose I/O |
| 144 | I | RESET | Master Reset Input |

**IC78: LC74781**

## Pin Functions

| Pin No. | Symbol | Function | Description |
|---|---|---|---|
| 1 | $V_{SS}1$ | Ground | Ground connection (digital system ground) |
| 2 | $Xtal_{IN}$ | Crystal oscillator connection | Used to connect the crystal oscillator and capacitor used to generate the internal synchronization signal, or to input an external clock (2fsc or 4fsc). |
| 3 | $Xtal_{OUT}$ | | |
| 4 | CTRL1 | Crystal oscillator input switching | Switches between external clock input mode and crystal oscillator mode.<br>Low = crystal oscillator mode, high = external clock mode |
| 5 | BLANK | Blanking output | Outputs the blank signal (the OR of the character and border signals). (Outputs a composite sync signal when MOD0 is high.) Outputs the crystal oscillator clock during reset (when the $\overline{RST}$ pin is low), but can be set up to not output this signal by microprocessor command. |
| 6 | $OSC_{IN}$ | LC oscillator connection | Connections for the coil and capacitor that form the oscillator that generates the character output dot clock. |
| 7 | $OSC_{OUT}$ | | |
| 8 | CHARA | Character output | Outputs the character signal. (Functions as the external synchronization signal discrimination signal output pin when MOD0 is high, and outputs the state of the judgment as to whether the external synchronization signal is present or not. Outputs a high level when the synchronization signal is present.) Outputs the dot clock (LC oscillator) during reset, but can be set up to not output this signal by microprocessor command. |
| 9 | $\overline{CS}$ | Enable input | Serial data input enable input. Serial data input is enabled when low. A pull-up resistor is built in (hysteresis input). |
| 10 | SCLK | Clock input | Serial data input clock input.<br>A pull-up resistor is built in (hysteresis input). |
| 11 | SIN | Data input | Serial data input. A pull-up resistor is built in (hysteresis input). |
| 12 | $V_{DD}2$ | Power supply | Composite video signal level adjustment power supply pin (analog system power supply). |
| 13 | $CV_{OUT}$ | Video signal output | Composite video signal output |
| 14 | NC | | Must be either connected to ground or left open. |
| 15 | $CV_{IN}$ | Video signal input | Composite video signal input |
| 16 | $V_{DD}1$ | Power supply | Power supply (+5 V: digital system power supply) |
| 17 | $SYN_{IN}$ | Sync separator circuit input | Video signal input for the built-in sync separator circuit (Used for either horizontal synchronization signal or composite sync signal input when the built-in sync separator circuit is not used.) |
| 18 | $SEP_C$ | Sync separator circuit bias voltage | Built-in sync separator circuit bias voltage monitor pin |
| 19 | $SEP_{OUT}$ | Composite sync signal output | Built-in sync separator circuit composite sync signal output. (When MOD1 is high, outputs a high level during internal synchronization and a low level during external synchronization.) (Outputs the $SYN_{IN}$ input signal when the internal sync separator circuit is not used.) |
| 20 | $SEP_{IN}$ | Vertical synchronization signal input | Inputs a vertical synchronization signal created by integrating the $SEP_{OUT}$ pin output signal. An integrator must be attached at the $SEP_{OUT}$ pin. This pin must be tied to $V_{DD}1$ if unused. |
| 21 | CTRL2 | NTSC/PAL-M switching input | The setting indicated by this pin takes priority in switching between the NTSC, PAL, PAL-M and PAL-N formats. A low level selects NTSC after a reset. The microprocessor command NTSC, PAL, PAL-M, or PAL-N setting is valid. High = PAL-M format. |
| 22 | CTRL3 | $SEP_{IN}$ input control | Controls whether or not the $\overline{VSYNC}$ signal is input to the $SEP_{IN}$ input. Low = $\overline{VSYNC}$ input, high = $\overline{VSYNC}$ not input. |
| 23 | RST | Reset input | System reset input. A pull-up resistor is built in (hysteresis input). |
| 24 | $V_{DD}1$ | Power supply (+5 V) | Power supply (+5 V: digital system power supply) |

**IC78: LC74781**

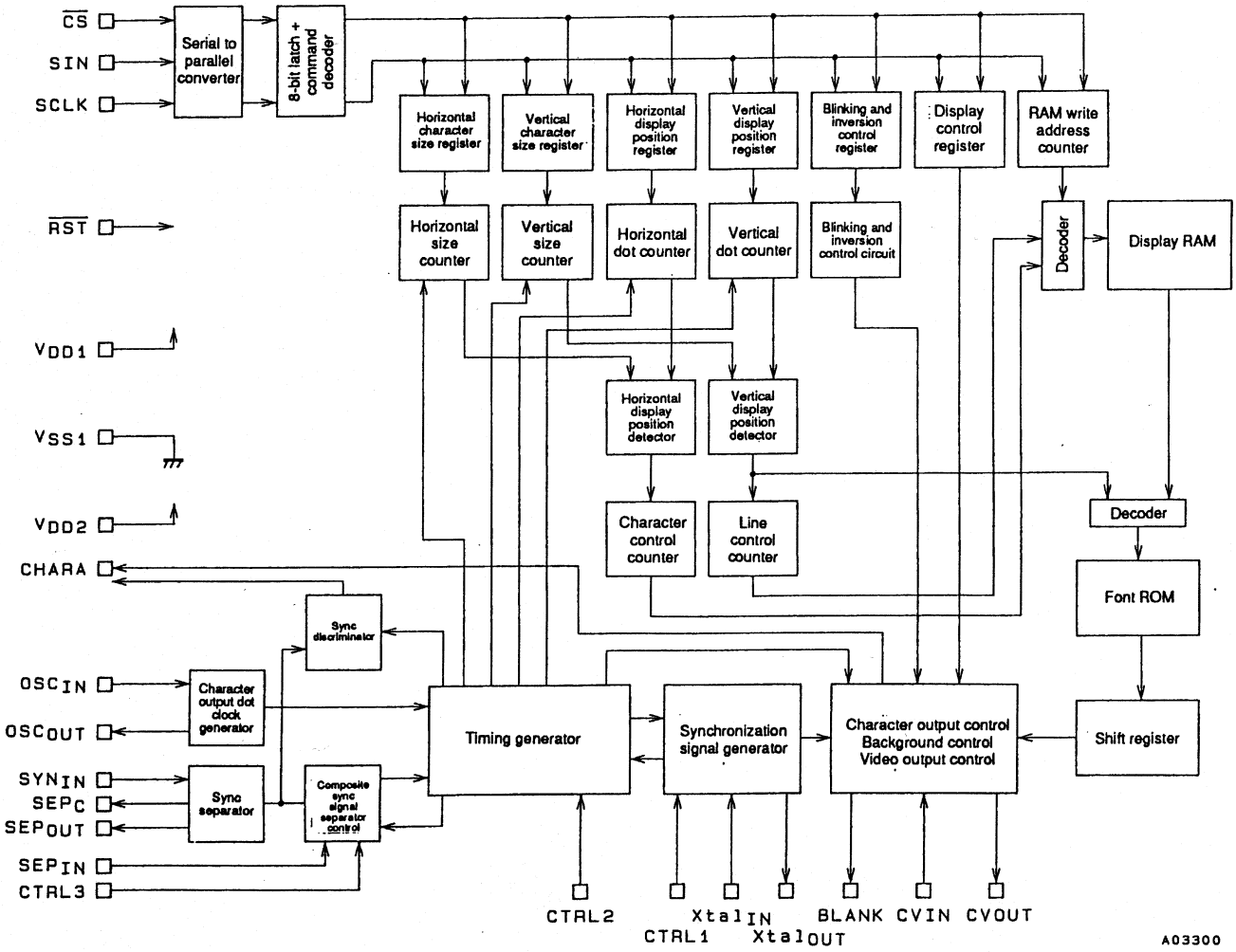

**IC81: NJU3430**

| No. | SYMBOL | I/O | F U N C T I O N |
|---|---|---|---|
| 57 | $V_{DD}$ | - | Power Source : $V_{DD}$=+3.0 to 5.5V |
| 49 | $V_{SS}$ | - | GND : $V_{SS}$=0V |
| 48 | $V_{FDP}$ | - | VFD Driving Power Sourse<br>$V_{DD}$-20V to $V_{DD}$-45V |
| 50 | $OSC_1$ | I | CR Oscillation Terminal<br>External R and C connect to these terminals.<br>(Target $f_{OSC}$=360kHz) |
| 51 | $OSC_2$ | O | |
| 54 | CLK | I | Serial Clock Input Terminal<br>The serial data input synchronizing the rise edge of this terminal. |
| 53 | $\overline{CS}$ | I | Chip Select Terminal<br>When the CS terminal is "H" the serial data input is not available. |
| 55 | SI | I | Serial Data Input Terminal<br>The data input is MSB first. |
| 56 | RS | I | Register Selection Signal Input Terminal<br>RS="0" : Instruction Register<br>RS="1" : Data Register |
| 52 | $\overline{RST}$ | I | Reset Terminal RST="L" : Reset<br>-Each Address : (00)H<br>-Each RAM Data : Unfixed<br>-Display Digits : 16-digit<br>-Contrast Control : 8/16 Dury<br>-All Display Off<br>-All Outputs are "L" |
| 61 to 64,<br>1 to 31 | $S_1$ to $S_{35}$ | O | Segment Output Terminals (Internal Pull-down Resistance) |
| 32 to 47 | $T_1$ to $T_{16}$ | O | Timing Output Terminals (Internal Pull-down Resistance) |
| 60<br>59 | $MK_1$<br>$MK_2$ | O | Icon Output Terminals (Internal Pull-down Resistance) |
| 58 | $P_1$ | O | Output Port Terminal<br>This terminal is suitable for LED. |

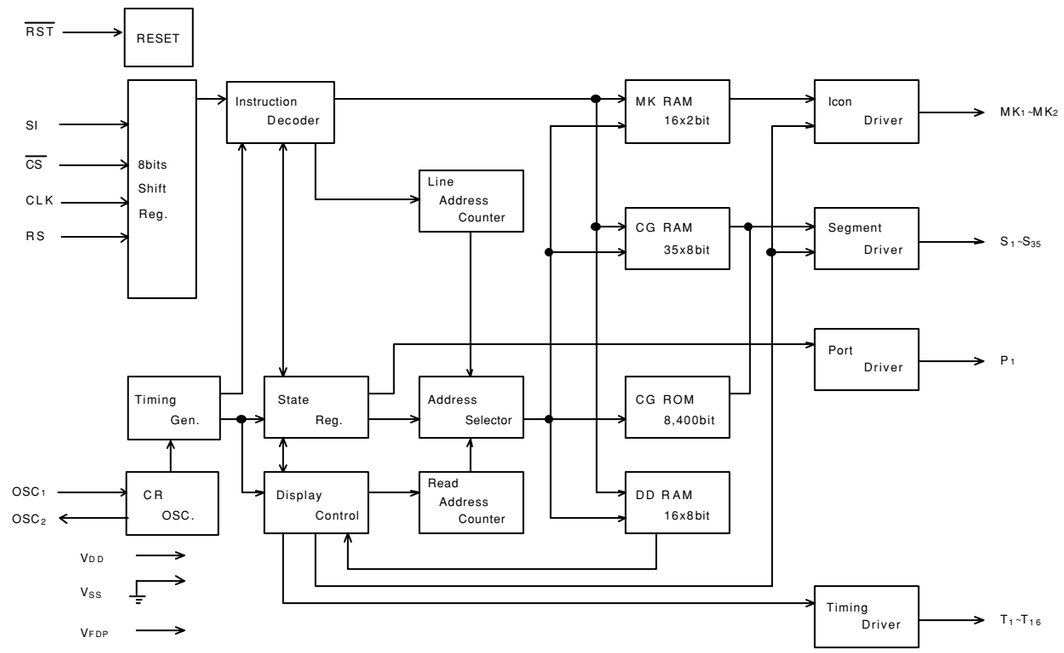

## 12. EXPLODED VIEW AND PARTS LIST

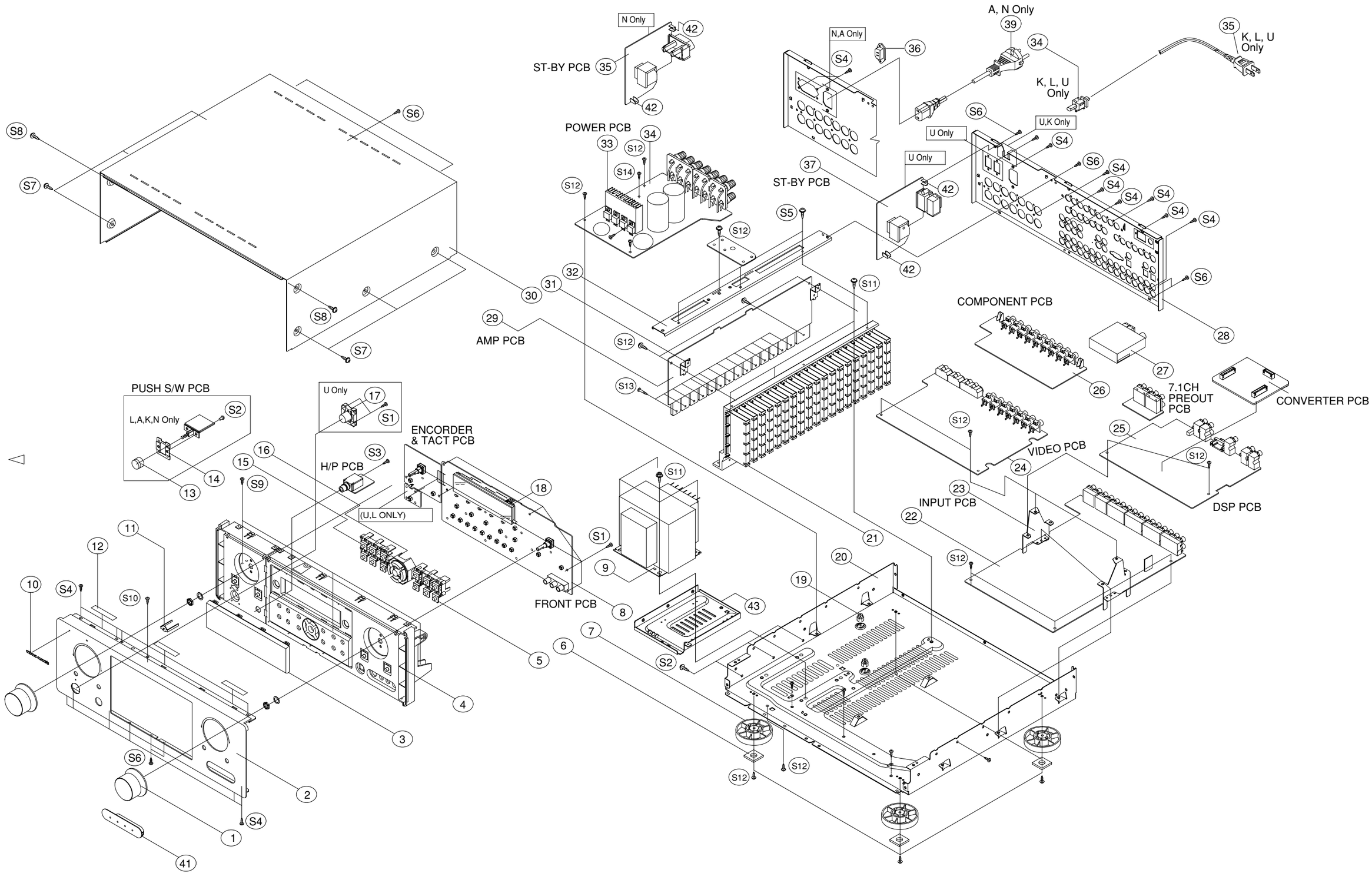

| P.C.B. NAME | POS. NO. | VERS. COLOR | PART NO. (FOR EUR) | PART NO. (MJI) | PART NAME | DESCRIPTION | |
|---|---|---|---|---|---|---|---|
| | 1 | /L1G | nsp | 00M28AW154020 | KNOB | MASTER KNOB (GOLD) | HGK1A090ZA |
| | 1 | /N1B | 00M28AW154010 | 00M28AW154010 | KNOB | MASTER KNOB (BLACK) | HGK1A090YA |
| | 1 | /N1G | 00M28AW154020 | 00M28AW154020 | KNOB | MASTER KNOB (GOLD) | HGK1A090ZA |
| | 1 | /N1S | 00M28AW154030 | 00M28AW154030 | KNOB | MASTER KNOB (SILVER) | HGK1A090XA |
| | 1 | /U1B | nsp | 00M28AW154010 | KNOB | MASTER KNOB (BLACK) | HGK1A090YA |
| | 2 | /L1G | nsp | 00M08BW248110 | PANEL | FRONT AL PANEL (GOLD) | CKM1A134UC24 |
| | 2 | /N1B | 00M08BW248010 | 00M08BW248010 | PANEL | FRONT AL PANEL (BLACK) | CKM1A134UC23 |
| | 2 | /N1G | 00M08BW248110 | 00M08BW248110 | PANEL | FRONT AL PANEL (GOLD) | CKM1A134UC24 |
| | 2 | /N1S | 00M08BW248210 | 00M08BW248210 | PANEL | FRONT AL PANEL (SILVER) | CKM1A134UC40 |
| | 2 | /U1B | nsp | 00M08BW248020 | PANEL | FRONT AL PANEL (U BLACK) | CKM1A134TC23 |
| | 3 | | nsp | 00M07BW158010 | WINDOW | WINDOW | CGU1A346 |
| | 4 | /L1G | nsp | 00M07BW105120 | CHASSIS | FRONT MOLD CHASSIS (GOLD) | CGW1A382RFZD4 |
| | 4 | /N1B | 00M07BW105020 | 00M07BW105020 | CHASSIS | FRONT MOLD CHASSIS (BLACK) | CGW1A382R4ZK92 |
| | 4 | /N1G | 00M07BW105120 | 00M07BW105120 | CHASSIS | FRONT MOLD CHASSIS (GOLD) | CGW1A382RFZD4 |
| | 4 | /N1S | 00M07BW105220 | 00M07BW105220 | CHASSIS | FRONT MOLD CHASSIS (SILVER) | CGW1A382R6ZG13 |
| | 4 | /U1B | nsp | 00M07BW105020 | CHASSIS | FRONT MOLD CHASSIS (BLACK) | CGW1A382R4ZK92 |
| | 5 | /L1G | nsp | 00M07BW270130 | BUTTON | BUTTON R (GOLD) | CBT1A941RFD4 |
| | 5 | /N1B | 00M07BW270030 | 00M07BW270030 | BUTTON | BUTTON R (BLACK) | CBT1A941K92 |
| | 5 | /N1G | 00M07BW270130 | 00M07BW270130 | BUTTON | BUTTON R (GOLD) | CBT1A941RFD4 |
| | 5 | /N1S | 00M07BW270230 | 00M07BW270230 | BUTTON | BUTTON R (SILVER) | CBT1A941R6G13 |
| | 5 | /U1B | nsp | 00M07BW270030 | BUTTON | BUTTON R (BLACK) | CBT1A941K92 |
| | 6 | | nsp | nsp | BUFFER | RUBBER , CUSHION | KHG1A050 |
| | 7 | /L1G | nsp | 00M243W057010 | LEG | FOOT , FRONT | CKL2A042H11 |
| | 7 | /N1B | 00M243W057010 | 00M243W057010 | LEG | FOOT , FRONT | CKL2A042H11 |
| | 7 | /N1G | 00M243W057010 | 00M243W057010 | LEG | FOOT , FRONT | CKL2A042H11 |
| | 7 | /N1S | 00M243W057210 | 00M243W057210 | LEG | FOOT , FRONT | CKL2A042H46 |
| | 7 | /U1B | nsp | 00M243W057010 | LEG | FOOT , FRONT | CKL2A042H11 |
| | 8 | /L1G | nsp | nsp | PCB ASSY | FRONT PCB ASS'Y /L1G | COP11703I |
| | 8 | /N1B | nsp | nsp | PCB ASSY | FRONT PCB ASS'Y /N1 | COP11703B |
| | 8 | /N1G | nsp | nsp | PCB ASSY | FRONT PCB ASS'Y /N1 | COP11703B |
| | 8 | /N1S | nsp | nsp | PCB ASSY | FRONT PCB ASS'Y /N1 | COP11703B |
| | 8 | /U1B | nsp | nsp | PCB ASSY | FRONT PCB ASS'Y /U1 | COP11703C |
| ▲ | 9 | /L1G | nsp | 90M-TS002280R | TRANSF. | TRANS, POWER | CLT5W015ZJ |
| ▲ | 9 | /N1B | 90M-TS002290R | 90M-TS002290R | TRANSF. | TRANS, POWER /N1S | CLT5W015ZE |
| ▲ | 9 | /N1G | 90M-TS002290R | 90M-TS002290R | TRANSF. | TRANS, POWER /N1S | CLT5W015ZE |
| ▲ | 9 | /N1S | 90M-TS002290R | 90M-TS002290R | TRANSF. | TRANS, POWER /N1S | CLT5W015ZE |
| ▲ | 9 | /U1B | nsp | 90M-TS002300R | TRANSF. | TRANS, POWER /U1B | CLT5W015ZU |
| | 10 | /L1G | nsp | 00M24AW251010 | BADGE | NEW MZ BADGE | CGB1A117 |
| | 10 | /N1B | 00M24AW251010 | 00M24AW251010 | BADGE | NEW MZ BADGE | CGB1A117 |
| | 10 | /N1G | 00M24AW251010 | 00M24AW251010 | BADGE | NEW MZ BADGE | CGB1A117 |
| | 10 | /N1S | 00M24AW251020 | 00M24AW251020 | BADGE | NEW MZ BADGE SILVER | CGB1A117G |
| | 10 | /U1B | nsp | 00M24AW251010 | BADGE | NEW MZ BADGE | CGB1A117 |
| | 11 | | nsp | 00M27AW355010 | LENS | STANDBY LENS | CGL1A216 |
| | 12 | | nsp | nsp | BUFFER | TAPE , HEMELON | KHS1A032 |
| | 13 | /N1B | 00M27AW270040 | 00M27AW270040 | BUTTON | POWER SW BUTTON (BLACK) | CBC1A146K92 |
| | 13 | /N1G | 00M27AW270140 | 00M27AW270140 | BUTTON | POWER SW BUTTON (GOLD) | CBC1A146RFD4 |
| | 13 | /N1S | 00M27AW270240 | 00M27AW270240 | BUTTON | POWER SW BUTTON (SILVER) | CBC1A146R6G13 |
| | 14 | /N1B | nsp | nsp | BRACKET | BRACKET , POWER | CMD1A493 |
| | 14 | /N1G | nsp | nsp | BRACKET | BRACKET , POWER | CMD1A493 |
| | 14 | /N1S | nsp | nsp | BRACKET | BRACKET , POWER | CMD1A493 |
| | 15 | /L1G | nsp | 00M07BW270120 | BUTTON | BUTTON L (GOLD) | CBT1A940RFD4 |
| | 15 | /N1B | 00M07BW270020 | 00M07BW270020 | BUTTON | BUTTON L (BLACK) | CBT1A940K92 |
| | 15 | /N1G | 00M07BW270120 | 00M07BW270120 | BUTTON | BUTTON L (GOLD) | CBT1A940RFD4 |
| | 15 | /N1S | 00M07BW270220 | 00M07BW270220 | BUTTON | BUTTON L (SILVER) | CBT1A940R6G13 |
| | 15 | /U1B | nsp | 00M07BW270020 | BUTTON | BUTTON L (BLACK) | CBT1A940K92 |
| | 16 | /L1G | nsp | 00M07BW270110 | BUTTON | CURSOR BUTTON (GOLD) | CBT1A939RFZD4 |
| | 16 | /N1B | 00M07BW270010 | 00M07BW270010 | BUTTON | CURSOR BUTTON (BLACK) | CBT1A939ZK92 |
| | 16 | /N1G | 00M07BW270110 | 00M07BW270110 | BUTTON | CURSOR BUTTON (GOLD) | CBT1A939RFZD4 |
| | 16 | /N1S | 00M07BW270210 | 00M07BW270210 | BUTTON | CURSOR BUTTON (SILVER) | CBT1A939R6ZG13 |
| | 16 | /U1B | nsp | 00M07BW270010 | BUTTON | CURSOR BUTTON (BLACK) | CBT1A939ZK92 |
| | 17 | /L1G | nsp | 00M27AW270140 | BUTTON | POWER SW BUTTON (GOLD) | CBT1A877RFD4 |
| | 17 | /U1B | nsp | 00M27AW270030 | BUTTON | POWER SW BUTTON (BLACK) | CBT1A877K92 |
| | 19 | | nsp | nsp | HOLDER | HOLDER , PCB | CHE1A030 |
| | 20 | | nsp | nsp | CHASSIS | CHASSIS , BOTTOM | CUA1A230 |
| | 21 | | nsp | nsp | HEATSINK | HEAT SINK ASS'Y | CMY1A236ZA |
| | 22 | | nsp | nsp | PCB ASSY | INPUT PCB ASS'Y N1 | COP11705B |
| | 23 | | nsp | nsp | BRACKET | BRACKET , PCB | CMD1A492 |
| | 24 | /L1G | nsp | nsp | PCB ASSY | VIDEO CONVERTER PCB ASS'Y /U1 | COP11709C |
| | 24 | /N1B | nsp | nsp | PCB ASSY | VIDEO CONVERTER PCB ASS'Y /N1 | COP11709B |
| | 24 | /N1G | nsp | nsp | PCB ASSY | VIDEO CONVERTER PCB ASS'Y /N1 | COP11709B |

NOTE : “nsp” PARTS IS LISTED FOR REFERENCE ONLY, MARANTZ WILL NOT SUPPLY THESE PARTS.

| P.C.B. NAME | POS. NO. | VERS. COLOR | PART NO. (FOR EUR) | PART NO. (MJI) | PART NAME | DESCRIPTION | |
|---|---|---|---|---|---|---|---|
| | 24 | /N1S | nsp | nsp | PCB ASSY | VIDEO CONVERTER PCB ASS'Y /N1 | COP11709B |
| | 24 | /U1B | nsp | nsp | PCB ASSY | VIDEO CONVERTER PCB ASS'Y /U1 | COP11709C |
| | 25 | /L1G | nsp | nsp | PCB ASSY | DSP PCB ASS'Y /L1G | COP11706I |
| | 25 | /N1B | nsp | nsp | PCB ASSY | DSP PCB ASS'Y /N1 | COP11706B |
| | 25 | /N1G | nsp | nsp | PCB ASSY | DSP PCB ASS'Y /N1 | COP11706B |
| | 25 | /N1S | nsp | nsp | PCB ASSY | DSP PCB ASS'Y /N1 | COP11706B |
| | 25 | /U1B | nsp | nsp | PCB ASSY | DSP PCB ASS'Y /U1 | COP11706C |
| | 26 | | nsp | nsp | PCB ASSY | COMPONENT PCB ASS'Y | COP11708B |
| | 27 | /L1G | nsp | 90M-AV000350R | TUNER | KST-MB014MA0-8 | CNVKSTMB014MA08 |
| | 27 | /N1B | 90M-AV000340R | 90M-AV000340R | TUNER | KST-MB114LA1-8 | CNVKSTMB114LA18 |
| | 27 | /N1G | 90M-AV000340R | 90M-AV000340R | TUNER | KST-MB114LA1-8 | CNVKSTMB114LA18 |
| | 27 | /N1S | 90M-AV000340R | 90M-AV000340R | TUNER | KST-MB114LA1-8 | CNVKSTMB114LA18 |
| | 27 | /U1B | nsp | 90M-AV000350R | TUNER | KST-MB014MA0-8 | CNVKSTMB014MA08 |
| | 28 | /L1G | nsp | nsp | PANEL | PANEL , REAR | CKF2A285X |
| | 28 | /N1B | nsp | nsp | PANEL | PANEL , REAR | CKF1A285Z |
| | 28 | /N1G | nsp | nsp | PANEL | PANEL , REAR | CKF1A285Z |
| | 28 | /N1S | nsp | nsp | PANEL | PANEL , REAR | CKF1A285Z |
| | 28 | /U1B | nsp | nsp | PANEL | PANEL , REAR | CKF2A285Z |
| | 29 | | nsp | nsp | PCB ASSY | AMP PCB ASS'Y | COP11704B |
| | 31 | | nsp | nsp | BRACKET | BRACKET , HEAT SINK | CMD1A490 |
| | 32 | | nsp | nsp | BRACKET | BRACKET , BAR | CMD1A491K92 |
| | 34 | /L1G | nsp | nsp | PCB ASSY | POWER PCB ASS'Y /U1 | COP11707C |
| | 34 | /N1B | nsp | nsp | PCB ASSY | POWER PCB ASS'Y /N1 | COP11707B |
| | 34 | /N1G | nsp | nsp | PCB ASSY | POWER PCB ASS'Y /N1 | COP11707B |
| | 34 | /N1S | nsp | nsp | PCB ASSY | POWER PCB ASS'Y /N1 | COP11707B |
| | 34 | /U1B | nsp | nsp | PCB ASSY | POWER PCB ASS'Y /U1 | COP11707C |
| | 36 | /N1B | 90M-YJ002690R | 90M-YJ002690R | INLET | R-301(187-2P) AC (10A/250V/EUR) | HJJ8A001Z |
| | 36 | /N1G | 90M-YJ002690R | 90M-YJ002690R | INLET | R-301(187-2P) AC (10A/250V/EUR) | HJJ8A001Z |
| | 36 | /N1S | 90M-YJ002690R | 90M-YJ002690R | INLET | R-301(187-2P) AC (10A/250V/EUR) | HJJ8A001Z |
| | ▲ 38 | /L1G | nsp | 90M-YC000860R | MAINS CORD | CORD, POWER | CJA2L072Z |
| | ▲ 38 | /U1B | nsp | 90M-YC000780R | MAINS CORD | CORD, POWER | CJA523FBYA |
| | 41 | | nsp | nsp | COVER | COVER , JACK | CGR1A344 |
| | 43 | | nsp | nsp | BRACKET | BRACKET , TRANS | CMD1A510 |
| | | /L1G | nsp | nsp | BUSHING | BUSHING , MAINS CORD | KHR1A028 |
| | | /U1B | nsp | nsp | BUSHING | BUSHING , MAINS CORD | KHR1A028 |
| | | | | 90M-FC500030R | FERRITE CORE | 29X7.7X19 | CLZ9W003Z |
| | ▲ F801 | /L1G | nsp | 90M-FS001080R | FUSE | | KBA2C1002TLEY |
| | ▲ F801 | /N1B | 90M-FS001090R | 90M-FS001090R | FUSE | 5A/250V(EUR) | KBA2C5000TLEY |
| | ▲ F801 | /N1G | 90M-FS001090R | 90M-FS001090R | FUSE | 5A/250V(EUR) | KBA2C5000TLEY |
| | ▲ F801 | /N1S | 90M-FS001090R | 90M-FS001090R | FUSE | 5A/250V(EUR) | KBA2C5000TLEY |
| | ▲ F801 | /U1B | nsp | 90M-FS001080R | FUSE | | KBA2C1002TLEY |
| | TH81 | | | 90M-HP000080R | POSISTOR | SR5400/SR6400 | BRTPTFM04BD222Q |
| | BN19 | /L1G | nsp | nsp | CONNECTIVE CORD | WIRE , ASS'Y | CWB4F232420UU |
| | BN19 | /N1B | nsp | nsp | CONNECTIVE CORD | WIRE , ASS'Y | CWB4F232420UU |
| | BN19 | /N1G | nsp | nsp | CONNECTIVE CORD | WIRE , ASS'Y | CWB4F232420UU |
| | BN19 | /N1S | nsp | nsp | CONNECTIVE CORD | WIRE , ASS'Y | CWB4F232420UU |
| | BN92 | /N1B | nsp | nsp | CONNECTIVE CORD | WIRE ASS'Y | CWZSR7400BN92 |
| | BN92 | /N1G | nsp | nsp | CONNECTIVE CORD | WIRE ASS'Y | CWZSR7400BN92 |
| | BN92 | /N1S | nsp | nsp | CONNECTIVE CORD | WIRE ASS'Y | CWZSR7400BN92 |
| | JW15 | | nsp | 90M-YU001540R | FPC | PITCH 1.0 | CWC1B4A16A270A |
| | JW25 | | nsp | 90M-YU001550R | FPC | | CWC1B4A19A080B |
| | JW27 | | nsp | 90M-YU001570R | FPC | PITCH 1.25 | CWC1C4A17B080B |
| | JW34 | /L1G | nsp | 90M-YU001560R | FPC | PITCH 1.25 | CWC1C4A15B160B |
| | JW34 | /U1B | nsp | 90M-YU001560R | FPC | PITCH 1.25 | CWC1C4A15B160B |
| | JW35 | /N1B | nsp | 90M-YU001580R | FPC | PITCH 1.25 | CWC1C4A17B160B |
| | JW35 | /N1G | nsp | 90M-YU001580R | FPC | PITCH 1.25 | CWC1C4A17B160B |
| | JW35 | /N1S | nsp | 90M-YU001580R | FPC | PITCH 1.25 | CWC1C4A17B160B |
| | JW36 | | nsp | 90M-YU001520R | FPC | PITCH 1.0 | CWC1B4A11A080A |
| | JW38 | | nsp | 90M-YU001530R | FPC | PITCH 1.0 | CWC1B4A13A450A |
| | JW42 | | nsp | 90M-YU001500R | FPC | PITCH 1.0 | CWC1B4A07A050A |
| | JW50 | | nsp | 90M-YU001510R | FPC | PITCH 1.0 | CWC1B4A11A050B |

NOTE : "nsp" PARTS IS LISTED FOR REFERENCE ONLY, MARANTZ WILL NOT SUPPLY THESE PARTS.

| P.C.B. NAME | POS. NO. | VERS. COLOR | PART NO. (FOR EUR) | PART NO. (MJI) | PART NAME | DESCRIPTION | |
|---|---|---|---|---|---|---|---|
| **PACKING** | | | | | | | |
| | | /L1G | nsp | 00M08BW851350 | USER GUIDE | USER GUIDE K | CQX1A924Z |
| | | /N1B | 00M08BW851310 | 00M08BW851310 | USER GUIDE | USER GUIDE N | CQX1A922Z |
| | | /N1G | 00M08BW851310 | 00M08BW851310 | USER GUIDE | USER GUIDE N | CQX1A922Z |
| | | /N1S | 00M08BW851310 | 00M08BW851310 | USER GUIDE | USER GUIDE N | CQX1A922Z |
| | | /U1B | nsp | 00M08BW851250 | USER GUIDE | USER GUIDE U | CQX1A923Z |
| | | | | 00MZK08BW0010 | UNIT KIT | REMOTE CONTROLLER RC5500SR | HARTSR5500 |
| | ▲ 39 | /N1B | 90M-ZC000320R | 90M-ZC000320R | MAINS CORD | 2WIRE 10A/250V | CJA2B054Z |
| | ▲ 39 | /N1G | 90M-ZC000320R | 90M-ZC000320R | MAINS CORD | 2WIRE 10A/250V | CJA2B054Z |
| | ▲ 39 | /N1S | 90M-ZC000320R | 90M-ZC000320R | MAINS CORD | 2WIRE 10A/250V | CJA2B054Z |
| **NOT STANDARD SPARE PART** | | | | | | | |
| | | /L1G | nsp | 00M08BW801020 | PACKING CASE | PACKING CASE WO CO | CPG1A720O |
| | | /N1B | nsp | 00M08BW801010 | PACKING CASE | PACKING CASE | CPG1A720Q |
| | | /N1G | nsp | 00M08BW801010 | PACKING CASE | PACKING CASE | CPG1A720Q |
| | | /N1S | nsp | 00M08BW801010 | PACKING CASE | PACKING CASE | CPG1A720Q |
| | | /U1B | nsp | 00M08BW801010 | PACKING CASE | PACKING CASE | CPG1A720Q |
| | | /N1B | nsp | 00M08BW805010 | MASS CARTON | MASTER PKG N | CPG1A746W |
| | | /N1G | nsp | 00M08BW805010 | MASS CARTON | MASTER PKG N | CPG1A746W |
| | | /N1S | nsp | 00M08BW805010 | MASS CARTON | MASTER PKG N | CPG1A746W |
| | | | nsp | 00M27AW809010 | CUSHION | CUSHION L | CPS2A649 |
| | | | nsp | 00M27AW809020 | CUSHION | CUSHION R | CPS2A650 |
| | 30 | /L1G | nsp | 00M27AW257110 | LID | TOP COVER (GOLD) | CKC1A139K118 |
| | 30 | /N1B | nsp | 00M27AW257010 | LID | TOP COVER (BLACK) | CKC1A139K117 |
| | 30 | /N1G | nsp | 00M27AW257110 | LID | TOP COVER (GOLD) | CKC1A139K118 |
| | 30 | /N1S | nsp | 00M27AW257210 | LID | TOP COVER (SILVER) | CKC1A139G14 |
| | 30 | /U1B | nsp | 00M27AW257010 | LID | TOP COVER (BLACK) | CKC1A139K117 |

NOTE : “nsp” PARTS IS LISTED FOR REFERENCE ONLY, MARANTZ WILL NOT SUPPLY THESE PARTS.

# 13. ELECTRICAL PARTS LIST

## PARTS INFORMATION

### *RESISTORS*

1) 00MGD05×××140, Carbon film fixed resistor, ±5% 1/4W
2) 00MGD05×××160, Carbon film fixed resistor, ±5% 1/6W

① —— Resistance value

Examples ;

① Resistance value

| | | | |
|---|---|---|---|
| 0.1 Ω .... 001 | 10 Ω .... 100 | 1 kΩ .... 102 | 100 kΩ .... 104 |
| 0.5 Ω .... 005 | 18 Ω .... 180 | 2.7 kΩ .... 272 | 680 kΩ .... 684 |
| 1 Ω .... 010 | 100 Ω .... 101 | 10 kΩ .... 103 | 1 MΩ .... 105 |
| 6.8 Ω .... 068 | 390 Ω .... 391 | 22 kΩ .... 223 | 4.7 MΩ .... 475 |

**Note** : Please distinguish 1/4W from 1/6W by the shape of parts used actually.

### *CAPACITORS*

CERAMIC CAP.

3) 00MDD1××××370 — Ceramic capacitor, Disc type, Temp.coeff.P350 ～N1000, 50V

② ③
③ — Capacity value
② — Tolerance

Examples ;

② Tolerance (Capacity deviation)

±0.25 pF .... 0
±0.5 pF .... 1
±5% .... 5

＊ Tolerance of COMMON PARTS handled here are as follows :

0.5 pF～ 5 pF .... ±0.25 pF
6 pF～ 10 pF .... ±0.5 pF
12 pF～ 560 pF .... ±5%

③ Capacity value

| | | |
|---|---|---|
| 0.5 pF .... 005 | 3 pF .... 030 | 100 pF .... 101 |
| 1 pF .... 010 | 10 pF .... 100 | 220 pF .... 221 |
| 1.5 pF .... 015 | 47 pF .... 470 | 560 pF .... 561 |

CERAMIC CAP.

4) 00MDK16×××300, — High dielectric constant ceramic capacitor, Disc type, Temp.chara. 2B4, 50V

④ — Capacity value

Examples ;

④ Capacity value

| | | |
|---|---|---|
| 100 pF .... 101 | 1000 pF .... 102 | 10000 pF .... 103 |
| 470 pF .... 471 | 2200 pF .... 222 | |

ELECTROLY CAP. ( ⏚ )

5) 00MEA××××××10, — Electrolytic capacitor, One-way lead type, Tolerance ±20%

⑤ ⑥
⑥ — Working voltage
⑤ — Capacity value

Examples ;

⑤ Capacity value

| | | |
|---|---|---|
| 0.1 μF .... 104 | 4.7 μF .... 475 | 100 μF .... 107 |
| 0.33 μF .... 334 | 10 μF .... 106 | 330 μF .... 337 |
| 1 μF .... 105 | 22 μF .... 226 | 1100 μF .... 118 |
| | | 2200 μF .... 228 |

⑥ Working voltage

| | |
|---|---|
| 6.3V .... 006 | 25V .... 025 |
| 10V .... 010 | 35V .... 035 |
| 16V .... 016 | 50V .... 050 |

FILM CAP. ( ⏚ )

6) 00MDF15×××350 → Plastic film capacitor, One-way type, Mylar ±5% 50V
00MDF15×××310
00MDF16×××310 → Plastic film capacitor, One-way type, Mylar ±10% 50V

⑦ — Capacity value

Examples ;

⑦ Capacity value

| | |
|---|---|
| 0.001 μF (1000 pF) ..... 102 | 0.1 μF .... 104 |
| 0.0018 μF ..... 182 | 0.56 μF .... 564 |
| 0.01 μF ..... 103 | 1 μF .... 105 |
| 0.015 μF ..... 153 | |

## NOTE ON SAFETY FOR FUSIBLE RESISTOR :

The suppliers and their type numbers of fusible resistors are as follows;

1. KOA Corporation

| Part No. (MJI) | Type No. (KOA) | Description |
|---|---|---|
| 00MNH05 ×××140 | → RF25S ××××ΩJ | (±5% 1/4W) |
| 00MNH05 ×××120 | → RF50S ××××ΩJ | (±5% 1/2W) |
| 00MNH85 ×××110 | → RF73B2A ××××ΩJ | (±5% 1/10W) |
| 00MNH95 ×××140 | → RF73B2E ××××ΩJ | (±5% 1/4W) |

＊ Resistance value — Resistance value (0.1 Ω – 10 kΩ)

2. Matsushita Electronic Components Co., Ltd

| Part No. (MJI) | Type No. (MEC) | Description |
|---|---|---|
| 00MNF05 ×××140 | → ERD-2FCJ ××× | (±5% 1/4W) |
| 00MRF05 ×××140 | | |
| 00MNF02 ×××140 | → ERD-2FCG ××× | (±2% 1/4W) |
| 00MRF02 ×××140 | | |

＊ Resistance value — ＊ Resistance value

Examples ;

＊ Resistance value

| | | | |
|---|---|---|---|
| 0.1 Ω .... 001 | 10 Ω .... 100 | 1 kΩ .... 102 | 100 kΩ .... 104 |
| 0.5 Ω .... 005 | 18 Ω .... 180 | 2.7 kΩ .... 272 | 680 kΩ .... 684 |
| 1 Ω .... 010 | 100 Ω .... 101 | 10 kΩ .... 103 | 1 MΩ .... 105 |
| 6.8 Ω .... 068 | 390 Ω .... 391 | 22 kΩ .... 223 | 4.7 MΩ .... 475 |

### *ABBREVIATION AND MARKS*

| | | | |
|---|---|---|---|
| ANT. | : ANTENNA | BATT. | : BATTERY |
| CAP. | : CAPACITOR | CER. | : CERAMIC |
| CONN. | : CONNECTING | DIG. | : DIGITAL |
| HP | : HEADPHONE | MIC. | : MICROPHONE |
| μ-PRO | : MICROPROCESSOR | REC. | : RECORDING |
| RES. | : RESISTOR | SPK | : SPEAKER |
| SW | : SWITCH | TRANSF. | : TRANSFORMER |
| TRIM. | : TRIMMING | TRS. | : TRANSISTOR |
| VAR. | : VARIABLE | X'TAL | : CRYSTAL |

## NOTE ON FUSE :

Regarding to all parts of parts code **00MFS20**xxx**2**xx, replace only with Wickmann-Werke GmbH, Type 372 non glass type fuse.

## NOTE ON SAFETY :

Symbol ⚠ Fire or electrical shock hazard. Only original parts should be used to replaced any part marked with symbol ⚠ . Any other component substitution (other than original type), may increase risk of fire or electrical shock hazard.

## 安全上の注意：

⚠がついている部品は、安全上重要な部品です。必ず指定されている部品番号の部品を使用して下さい。

| P.C.B. NAME | POS. NO. | VERS. COLOR | PART NO. (FOR EUR) | PART NO. (MJI) | PART NAME | DESCRIPTION | |
|---|---|---|---|---|---|---|---|
| | | | | | AMP PCB (CUP11704Z) | | |
| AMP | BN23 | | nsp | nsp | CONNECTIVE CORD | | CWZSR7400BN23 |
| AMP | BN24 | | nsp | nsp | CONNECTIVE CORD | | CWZSR7400BN24 |
| AMP | BN25 | | nsp | nsp | CONNECTIVE CORD | | CWB1B905180EN |
| AMP | BN70 | | nsp | nsp | CONNECTIVE CORD | | CWZSR5500BN70 |
| AMP | C401 | | nsp | 00MOA10605020 | ELECT CAP. | 10UF 50V | HCEA1HH100T |
| AMP | C402 | | nsp | 00MOA10605020 | ELECT CAP. | 10UF 50V | HCEA1HH100T |
| AMP | C403 | | nsp | nsp | CERAMIC CAP. | 330PF 50V KB | CCKT1H331KB |
| AMP | C404 | | nsp | nsp | CERAMIC CAP. | 330PF 50V KB | CCKT1H331KB |
| AMP | C405 | | nsp | nsp | CERAMIC CAP. | 10PF 50V DC | CCCT1H100DC |
| AMP | C406 | | nsp | nsp | CERAMIC CAP. | 10PF 50V DC | CCCT1H100DC |
| AMP | C407 | | 90M-OF100350R | 90M-OF100350R | FILM CAP | 2200PF 50V J | HCQI1H222JZT |
| AMP | C408 | | 90M-OF100350R | 90M-OF100350R | FILM CAP | 2200PF 50V J | HCQI1H222JZT |
| AMP | C409 | | nsp | 00MOA22605020 | ELECT CAP. | 22UF 50V | HCEA1HH220T |
| AMP | C410 | | nsp | 00MOA22605020 | ELECT CAP. | 22UF 50V | HCEA1HH220T |
| AMP | C411 | | nsp | 00MOA10706320 | ELECT CAP. | 100UF 63V | HCEA1JH101E |
| AMP | C412 | | nsp | 00MOA10706320 | ELECT CAP. | 100UF 63V | HCEA1JH101E |
| AMP | C413 | | nsp | 00MOA10706320 | ELECT CAP. | 100UF 63V | HCEA1JH101E |
| AMP | C414 | | nsp | 00MOA10706320 | ELECT CAP. | 100UF 63V | HCEA1JH101E |
| AMP | C419 | | nsp | 00MOA10705020 | ELECT CAP. | 100UF 50V | HCEA1HH101T |
| AMP | C420 | | nsp | 00MOA10705020 | ELECT CAP. | 100UF 50V | HCEA1HH101T |
| AMP | C421 | | nsp | 00MOA10701620 | ELECT CAP. | 100UF 16V | HCEA1CH101T |
| AMP | C422 | | nsp | 00MOA10701620 | ELECT CAP. | 100UF 16V | HCEA1CH101T |
| AMP | C501 | | nsp | 00MOA10605020 | ELECT CAP. | 10UF 50V | HCEA1HH100T |
| AMP | C502 | | nsp | 00MOA10605020 | ELECT CAP. | 10UF 50V | HCEA1HH100T |
| AMP | C503 | | nsp | nsp | CERAMIC CAP. | 330PF 50V KB | CCKT1H331KB |
| AMP | C504 | | nsp | nsp | CERAMIC CAP. | 330PF 50V KB | CCKT1H331KB |
| AMP | C505 | | nsp | nsp | CERAMIC CAP. | 10PF 50V DC | CCCT1H100DC |
| AMP | C506 | | nsp | nsp | CERAMIC CAP. | 10PF 50V DC | CCCT1H100DC |
| AMP | C507 | | 90M-OF100350R | 90M-OF100350R | FILM CAP | 2200PF 50V J | HCQI1H222JZT |
| AMP | C508 | | 90M-OF100350R | 90M-OF100350R | FILM CAP | 2200PF 50V J | HCQI1H222JZT |
| AMP | C509 | | nsp | 00MOA22605020 | ELECT CAP. | 22UF 50V | HCEA1HH220T |
| AMP | C510 | | nsp | 00MOA22605020 | ELECT CAP. | 22UF 50V | HCEA1HH220T |
| AMP | C511 | | nsp | 00MOA10706320 | ELECT CAP. | 100UF 63V | HCEA1JH101E |
| AMP | C512 | | nsp | 00MOA10706320 | ELECT CAP. | 100UF 63V | HCEA1JH101E |
| AMP | C513 | | nsp | 00MOA10706320 | ELECT CAP. | 100UF 63V | HCEA1JH101E |
| AMP | C514 | | nsp | 00MOA10706320 | ELECT CAP. | 100UF 63V | HCEA1JH101E |
| AMP | C519 | | nsp | 00MOA10705020 | ELECT CAP. | 100UF 50V | HCEA1HH101T |
| AMP | C520 | | nsp | 00MOA10705020 | ELECT CAP. | 100UF 50V | HCEA1HH101T |
| AMP | C521 | | nsp | 00MOA10701620 | ELECT CAP. | 100UF 16V | HCEA1CH101T |
| AMP | C522 | | nsp | 00MOA10701620 | ELECT CAP. | 100UF 16V | HCEA1CH101T |
| AMP | C601 | | nsp | 00MOA10605020 | ELECT CAP. | 10UF 50V | HCEA1HH100T |
| AMP | C602 | | nsp | 00MOA10605020 | ELECT CAP. | 10UF 50V | HCEA1HH100T |
| AMP | C603 | | nsp | nsp | CERAMIC CAP. | 330PF 50V KB | CCKT1H331KB |
| AMP | C604 | | nsp | nsp | CERAMIC CAP. | 330PF 50V KB | CCKT1H331KB |
| AMP | C605 | | nsp | nsp | CERAMIC CAP. | 10PF 50V DC | CCCT1H100DC |
| AMP | C606 | | nsp | nsp | CERAMIC CAP. | 10PF 50V DC | CCCT1H100DC |
| AMP | C607 | | 90M-OF100350R | 90M-OF100350R | FILM CAP | 2200PF 50V J | HCQI1H222JZT |
| AMP | C608 | | 90M-OF100350R | 90M-OF100350R | FILM CAP | 2200PF 50V J | HCQI1H222JZT |
| AMP | C609 | | nsp | 00MOA22605020 | ELECT CAP. | 22UF 50V | HCEA1HH220T |
| AMP | C610 | | nsp | 00MOA22605020 | ELECT CAP. | 22UF 50V | HCEA1HH220T |
| AMP | C611 | | nsp | 00MOA10706320 | ELECT CAP. | 100UF 63V | HCEA1JH101E |
| AMP | C612 | | nsp | 00MOA10706320 | ELECT CAP. | 100UF 63V | HCEA1JH101E |
| AMP | C613 | | nsp | 00MOA10706320 | ELECT CAP. | 100UF 63V | HCEA1JH101E |
| AMP | C614 | | nsp | 00MOA10706320 | ELECT CAP. | 100UF 63V | HCEA1JH101E |
| AMP | C619 | | nsp | 00MOA10705020 | ELECT CAP. | 100UF 50V | HCEA1HH101T |
| AMP | C620 | | nsp | 00MOA10705020 | ELECT CAP. | 100UF 50V | HCEA1HH101T |
| AMP | C621 | | nsp | 00MOA10701620 | ELECT CAP. | 100UF 16V | HCEA1CH101T |
| AMP | C622 | | nsp | 00MOA10701620 | ELECT CAP. | 100UF 16V | HCEA1CH101T |
| AMP | C701 | | nsp | 00MOA10605020 | ELECT CAP. | 10UF 50V | HCEA1HH100T |
| AMP | C703 | | nsp | nsp | CERAMIC CAP. | 330PF 50V KB | CCKT1H331KB |
| AMP | C706 | | nsp | nsp | CERAMIC CAP. | 10PF 50V DC | CCCT1H100DC |
| AMP | C707 | | 90M-OF100350R | 90M-OF100350R | FILM CAP | 2200PF 50V J | HCQI1H222JZT |
| AMP | C709 | | nsp | 00MOA22605020 | ELECT CAP. | 22UF 50V | HCEA1HH220T |
| AMP | C711 | | nsp | 00MOA10706320 | ELECT CAP. | 100UF 63V | HCEA1JH101E |
| AMP | C713 | | nsp | 00MOA10706320 | ELECT CAP. | 100UF 63V | HCEA1JH101E |
| AMP | C719 | | nsp | 00MOA10705020 | ELECT CAP. | 100UF 50V | HCEA1HH101T |
| AMP | C721 | | nsp | 00MOA10701620 | ELECT CAP. | 100UF 16V | HCEA1CH101T |

NOTE : “nsp” PARTS IS LISTED FOR REFERENCE ONLY, MARANTZ WILL NOT SUPPLY THESE PARTS.

| P.C.B. NAME | POS. NO. | VERS. COLOR | PART NO. (FOR EUR) | PART NO. (MJI) | PART NAME | DESCRIPTION | |
|---|---|---|---|---|---|---|---|
| AMP | C722 | | nsp | 00MOA10701620 | ELECT CAP. | 100UF 16V | HCEA1CH101T |
| AMP | C801 | | nsp | 00MOA47505020 | ELECT CAP. | 4.7UF 50V | HCEA1HH4R7T |
| AMP | C802 | | nsp | nsp | CERAMIC CAP. | 0.01UF 50V ZF | CCKT1H103ZF |
| AMP | C803 | | nsp | nsp | CERAMIC CAP. | 0.01UF 50V ZF | CCKT1H103ZF |
| AMP | C804 | | nsp | 00MOA47605020 | ELECT CAP. | 47UF 50V | HCEA1HH470T |
| AMP | C805 | | nsp | 00MOA47405020 | ELECT CAP. | 0.47UF 50V | HCEA1HHR47T |
| AMP | C807 | | nsp | nsp | CERAMIC CAP. | 0.01UF 50V ZF | CCKT1H103ZF |
| AMP | C808 | | nsp | nsp | CERAMIC CAP. | 0.01UF 50V ZF | CCKT1H103ZF |
| AMP | C809 | | nsp | nsp | CERAMIC CAP. | 4700PF 50V KB | CCKT1H472KB |
| AMP | C810 | | 90M-OF100440R | 90M-OF100440R | FILM CAP | 0.1UF 250V | HCME2E104JP04T |
| AMP | C811 | | 90M-OF100440R | 90M-OF100440R | FILM CAP | 0.1UF 250V | HCME2E104JP04T |
| AMP | CN41 | | nsp | nsp | JACK | MOLEX 5267-02A | KJP02GA01ZM |
| AMP | CN42 | | nsp | nsp | JACK | MOLEX 5267-02A | KJP02GA01ZM |
| AMP | CN51 | | nsp | nsp | JACK | MOLEX 5267-02A | KJP02GA01ZM |
| AMP | CN52 | | nsp | nsp | JACK | MOLEX 5267-02A | KJP02GA01ZM |
| AMP | CN61 | | nsp | nsp | JACK | MOLEX 5267-02A | KJP02GA01ZM |
| AMP | CN62 | | nsp | nsp | JACK | MOLEX 5267-02A | KJP02GA01ZM |
| AMP | CN71 | | nsp | nsp | JACK | MOLEX 5267-02A | KJP02GA01ZM |
| AMP | CN73 | | nsp | nsp | JACK | A3963WV2-6P | CJP06GA148ZW |
| AMP | CN81 | | nsp | nsp | JACK | | KJP02GA19ZM |
| AMP | CN82 | | nsp | nsp | JACK | | KJP02GA19ZM |
| AMP | D401 | | nsp | 00MHD20015210 | DIODE | 1SS133T-77 | HVD1SS133MT |
| AMP | D402 | | nsp | 00MHD20015210 | DIODE | 1SS133T-77 | HVD1SS133MT |
| AMP | D403 | | nsp | 00MHD20015210 | DIODE | 1SS133T-77 | HVD1SS133MT |
| AMP | D404 | | nsp | 00MHD20015210 | DIODE | 1SS133T-77 | HVD1SS133MT |
| AMP | D405 | | nsp | 00MHD20015210 | DIODE | 1SS133T-77 | HVD1SS133MT |
| AMP | D406 | | nsp | 00MHD20015210 | DIODE | 1SS133T-77 | HVD1SS133MT |
| AMP | D407 | | nsp | 00MHD20015210 | DIODE | 1SS133T-77 | HVD1SS133MT |
| AMP | D408 | | nsp | 00MHD20015210 | DIODE | 1SS133T-77 | HVD1SS133MT |
| AMP | D409 | | 90M-HD302240R | 90M-HD302240R | ZENER DIODE | | HVDMTZJ3.6BT |
| AMP | D410 | | 90M-HD302240R | 90M-HD302240R | ZENER DIODE | | HVDMTZJ3.6BT |
| AMP | D411 | | 90M-HD302240R | 90M-HD302240R | ZENER DIODE | | HVDMTZJ3.6BT |
| AMP | D412 | | 90M-HD302240R | 90M-HD302240R | ZENER DIODE | | HVDMTZJ3.6BT |
| AMP | D413 | | nsp | 00MHD20015210 | DIODE | 1SS133T-77 | HVD1SS133MT |
| AMP | D414 | | nsp | 00MHD20015210 | DIODE | 1SS133T-77 | HVD1SS133MT |
| AMP | D415 | | nsp | 00MHD20015210 | DIODE | 1SS133T-77 | HVD1SS133MT |
| AMP | D416 | | nsp | 00MHD20015210 | DIODE | 1SS133T-77 | HVD1SS133MT |
| AMP | D501 | | nsp | 00MHD20015210 | DIODE | 1SS133T-77 | HVD1SS133MT |
| AMP | D502 | | nsp | 00MHD20015210 | DIODE | 1SS133T-77 | HVD1SS133MT |
| AMP | D503 | | nsp | 00MHD20015210 | DIODE | 1SS133T-77 | HVD1SS133MT |
| AMP | D504 | | nsp | 00MHD20015210 | DIODE | 1SS133T-77 | HVD1SS133MT |
| AMP | D505 | | nsp | 00MHD20015210 | DIODE | 1SS133T-77 | HVD1SS133MT |
| AMP | D506 | | nsp | 00MHD20015210 | DIODE | 1SS133T-77 | HVD1SS133MT |
| AMP | D507 | | nsp | 00MHD20015210 | DIODE | 1SS133T-77 | HVD1SS133MT |
| AMP | D508 | | nsp | 00MHD20015210 | DIODE | 1SS133T-77 | HVD1SS133MT |
| AMP | D509 | | 90M-HD302240R | 90M-HD302240R | ZENER DIODE | | HVDMTZJ3.6BT |
| AMP | D510 | | 90M-HD302240R | 90M-HD302240R | ZENER DIODE | | HVDMTZJ3.6BT |
| AMP | D511 | | 90M-HD302240R | 90M-HD302240R | ZENER DIODE | | HVDMTZJ3.6BT |
| AMP | D512 | | 90M-HD302240R | 90M-HD302240R | ZENER DIODE | | HVDMTZJ3.6BT |
| AMP | D513 | | nsp | 00MHD20015210 | DIODE | 1SS133T-77 | HVD1SS133MT |
| AMP | D514 | | nsp | 00MHD20015210 | DIODE | 1SS133T-77 | HVD1SS133MT |
| AMP | D515 | | nsp | 00MHD20015210 | DIODE | 1SS133T-77 | HVD1SS133MT |
| AMP | D516 | | nsp | 00MHD20015210 | DIODE | 1SS133T-77 | HVD1SS133MT |
| AMP | D601 | | nsp | 00MHD20015210 | DIODE | 1SS133T-77 | HVD1SS133MT |
| AMP | D602 | | nsp | 00MHD20015210 | DIODE | 1SS133T-77 | HVD1SS133MT |
| AMP | D603 | | nsp | 00MHD20015210 | DIODE | 1SS133T-77 | HVD1SS133MT |
| AMP | D604 | | nsp | 00MHD20015210 | DIODE | 1SS133T-77 | HVD1SS133MT |
| AMP | D605 | | nsp | 00MHD20015210 | DIODE | 1SS133T-77 | HVD1SS133MT |
| AMP | D606 | | nsp | 00MHD20015210 | DIODE | 1SS133T-77 | HVD1SS133MT |
| AMP | D607 | | nsp | 00MHD20015210 | DIODE | 1SS133T-77 | HVD1SS133MT |
| AMP | D608 | | nsp | 00MHD20015210 | DIODE | 1SS133T-77 | HVD1SS133MT |
| AMP | D609 | | 90M-HD302240R | 90M-HD302240R | ZENER DIODE | | HVDMTZJ3.6BT |
| AMP | D610 | | 90M-HD302240R | 90M-HD302240R | ZENER DIODE | | HVDMTZJ3.6BT |
| AMP | D611 | | 90M-HD302240R | 90M-HD302240R | ZENER DIODE | | HVDMTZJ3.6BT |
| AMP | D612 | | 90M-HD302240R | 90M-HD302240R | ZENER DIODE | | HVDMTZJ3.6BT |
| AMP | D613 | | nsp | 00MHD20015210 | DIODE | 1SS133T-77 | HVD1SS133MT |
| AMP | D614 | | nsp | 00MHD20015210 | DIODE | 1SS133T-77 | HVD1SS133MT |
| AMP | D615 | | nsp | 00MHD20015210 | DIODE | 1SS133T-77 | HVD1SS133MT |

NOTE : “nsp” PARTS IS LISTED FOR REFERENCE ONLY, MARANTZ WILL NOT SUPPLY THESE PARTS.

| P.C.B. NAME | POS. NO. | VERS. COLOR | PART NO. (FOR EUR) | PART NO. (MJI) | PART NAME | DESCRIPTION | |
|---|---|---|---|---|---|---|---|
| AMP | D616 | | nsp | 00MHD20015210 | DIODE | 1SS133T-77 | HVD1SS133MT |
| AMP | D701 | | nsp | 00MHD20015210 | DIODE | 1SS133T-77 | HVD1SS133MT |
| AMP | D703 | | nsp | 00MHD20015210 | DIODE | 1SS133T-77 | HVD1SS133MT |
| AMP | D705 | | nsp | 00MHD20015210 | DIODE | 1SS133T-77 | HVD1SS133MT |
| AMP | D707 | | nsp | 00MHD20015210 | DIODE | 1SS133T-77 | HVD1SS133MT |
| AMP | D709 | | 90M-HD302240R | 90M-HD302240R | ZENER DIODE | | HVDMTZJ3.6BT |
| AMP | D710 | | 90M-HD302240R | 90M-HD302240R | ZENER DIODE | | HVDMTZJ3.6BT |
| AMP | D713 | | nsp | 00MHD20015210 | DIODE | 1SS133T-77 | HVD1SS133MT |
| AMP | D715 | | nsp | 00MHD20015210 | DIODE | 1SS133T-77 | HVD1SS133MT |
| AMP | D801 | | 90M-HE200250R | 90M-HE200250R | DIODE | GBJ1504 | HVDGBJ1504 |
| AMP | IC41 | | 00MHC10053090 | 00MHC10053090 | IC | NJM2068DD | HVINJM2068DD |
| AMP | IC51 | | 00MHC10053090 | 00MHC10053090 | IC | NJM2068DD | HVINJM2068DD |
| AMP | IC61 | | 00MHC10053090 | 00MHC10053090 | IC | NJM2068DD | HVINJM2068DD |
| AMP | IC71 | | 00MHC10053090 | 00MHC10053090 | IC | NJM2068DD | HVINJM2068DD |
| AMP | IC81 | | 00MHC10042050 | 00MHC10042050 | IC | | HVITA7317P |
| AMP | J200 | | nsp | nsp | CONNECTIVE CORD | SN95/PB5 , 0.6 | C3A206 |
| AMP | J202 | | nsp | nsp | CONNECTIVE CORD | SN95/PB5 , 0.6 | C3A206 |
| AMP | J203 | | nsp | nsp | CONNECTIVE CORD | SN95/PB5 , 0.6 | C3A206 |
| AMP | J204 | | nsp | nsp | CONNECTIVE CORD | SN95/PB5 , 0.6 | C3A206 |
| AMP | J205 | | nsp | nsp | CONNECTIVE CORD | SN95/PB5 , 0.6 | C3A206 |
| AMP | J206 | | nsp | nsp | CONNECTIVE CORD | SN95/PB5 , 0.6 | C3A206 |
| AMP | J207 | | nsp | nsp | CONNECTIVE CORD | SN95/PB5 , 0.6 | C3A206 |
| AMP | J208 | | nsp | nsp | CONNECTIVE CORD | SN95/PB5 , 0.6 | C3A206 |
| AMP | J209 | | nsp | nsp | CONNECTIVE CORD | SN95/PB5 , 0.6 | C3A206 |
| AMP | J210 | | nsp | nsp | CONNECTIVE CORD | SN95/PB5 , 0.6 | C3A206 |
| AMP | J211 | | nsp | nsp | CONNECTIVE CORD | SN95/PB5 , 0.6 | C3A206 |
| AMP | J212 | | nsp | nsp | CONNECTIVE CORD | SN95/PB5 , 0.6 | C3A206 |
| AMP | J213 | | nsp | nsp | CONNECTIVE CORD | SN95/PB5 , 0.6 | C3A206 |
| AMP | J214 | | nsp | nsp | CONNECTIVE CORD | SN95/PB5 , 0.6 | C3A206 |
| AMP | J215 | | nsp | nsp | CONNECTIVE CORD | SN95/PB5 , 0.6 | C3A206 |
| AMP | J216 | | nsp | nsp | CONNECTIVE CORD | SN95/PB5 , 0.6 | C3A206 |
| AMP | J217 | | nsp | nsp | CONNECTIVE CORD | SN95/PB5 , 0.6 | C3A206 |
| AMP | J218 | | nsp | nsp | CONNECTIVE CORD | SN95/PB5 , 0.6 | C3A206 |
| AMP | J219 | | nsp | nsp | CONNECTIVE CORD | SN95/PB5 , 0.6 | C3A206 |
| AMP | J220 | | nsp | nsp | CONNECTIVE CORD | SN95/PB5 , 0.6 | C3A206 |
| AMP | J221 | | nsp | nsp | CONNECTIVE CORD | SN95/PB5 , 0.6 | C3A206 |
| AMP | J222 | | nsp | nsp | CONNECTIVE CORD | SN95/PB5 , 0.6 | C3A206 |
| AMP | J223 | | nsp | nsp | CONNECTIVE CORD | SN95/PB5 , 0.6 | C3A206 |
| AMP | J224 | | nsp | nsp | CONNECTIVE CORD | SN95/PB5 , 0.6 | C3A206 |
| AMP | J225 | | nsp | nsp | CONNECTIVE CORD | SN95/PB5 , 0.6 | C3A206 |
| AMP | J226 | | nsp | nsp | CONNECTIVE CORD | SN95/PB5 , 0.6 | C3A206 |
| AMP | J227 | | nsp | nsp | CONNECTIVE CORD | SN95/PB5 , 0.6 | C3A206 |
| AMP | J228 | | nsp | nsp | CONNECTIVE CORD | SN95/PB5 , 0.6 | C3A206 |
| AMP | J229 | | nsp | nsp | CONNECTIVE CORD | SN95/PB5 , 0.6 | C3A206 |
| AMP | J230 | | nsp | nsp | CONNECTIVE CORD | SN95/PB5 , 0.6 | C3A206 |
| AMP | J231 | | nsp | nsp | CONNECTIVE CORD | SN95/PB5 , 0.6 | C3A206 |
| AMP | J232 | | nsp | nsp | CONNECTIVE CORD | SN95/PB5 , 0.6 | C3A206 |
| AMP | J233 | | nsp | nsp | CONNECTIVE CORD | SN95/PB5 , 0.6 | C3A206 |
| AMP | J234 | | nsp | nsp | CONNECTIVE CORD | SN95/PB5 , 0.6 | C3A206 |
| AMP | J235 | | nsp | nsp | CONNECTIVE CORD | SN95/PB5 , 0.6 | C3A206 |
| AMP | J236 | | nsp | nsp | CONNECTIVE CORD | SN95/PB5 , 0.6 | C3A206 |
| AMP | J237 | | nsp | nsp | CONNECTIVE CORD | SN95/PB5 , 0.6 | C3A206 |
| AMP | J238 | | nsp | nsp | CONNECTIVE CORD | SN95/PB5 , 0.6 | C3A206 |
| AMP | J239 | | nsp | nsp | CONNECTIVE CORD | SN95/PB5 , 0.6 | C3A206 |
| AMP | J240 | | nsp | nsp | CONNECTIVE CORD | SN95/PB5 , 0.6 | C3A206 |
| AMP | J241 | | nsp | nsp | CONNECTIVE CORD | SN95/PB5 , 0.6 | C3A206 |
| AMP | J242 | | nsp | nsp | CONNECTIVE CORD | SN95/PB5 , 0.6 | C3A206 |
| AMP | J243 | | nsp | nsp | CONNECTIVE CORD | SN95/PB5 , 0.6 | C3A206 |
| AMP | J244 | | nsp | nsp | CONNECTIVE CORD | SN95/PB5 , 0.6 | C3A206 |
| AMP | J245 | | nsp | nsp | CONNECTIVE CORD | SN95/PB5 , 0.6 | C3A206 |
| AMP | J246 | | nsp | nsp | CONNECTIVE CORD | SN95/PB5 , 0.6 | C3A206 |
| AMP | J247 | | nsp | nsp | CONNECTIVE CORD | SN95/PB5 , 0.6 | C3A206 |
| AMP | J248 | | nsp | nsp | CONNECTIVE CORD | SN95/PB5 , 0.6 | C3A206 |
| AMP | J249 | | nsp | nsp | CONNECTIVE CORD | SN95/PB5 , 0.6 | C3A206 |
| AMP | J250 | | nsp | nsp | CONNECTIVE CORD | SN95/PB5 , 0.6 | C3A206 |
| AMP | J251 | | nsp | nsp | CONNECTIVE CORD | SN95/PB5 , 0.6 | C3A206 |
| AMP | J252 | | nsp | nsp | CONNECTIVE CORD | SN95/PB5 , 0.6 | C3A206 |
| AMP | J253 | | nsp | nsp | CONNECTIVE CORD | SN95/PB5 , 0.6 | C3A206 |

NOTE : “nsp” PARTS IS LISTED FOR REFERENCE ONLY, MARANTZ WILL NOT SUPPLY THESE PARTS.

| P.C.B. NAME | POS. NO. | VERS. COLOR | PART NO. (FOR EUR) | PART NO. (MJI) | PART NAME | DESCRIPTION |
|---|---|---|---|---|---|---|
| AMP | J254 | | nsp | nsp | CONNECTIVE CORD | SN95/PB5 , 0.6 C3A206 |
| AMP | J255 | | nsp | nsp | CONNECTIVE CORD | SN95/PB5 , 0.6 C3A206 |
| AMP | J256 | | nsp | nsp | CONNECTIVE CORD | SN95/PB5 , 0.6 C3A206 |
| AMP | J257 | | nsp | nsp | CONNECTIVE CORD | SN95/PB5 , 0.6 C3A206 |
| AMP | J258 | | nsp | nsp | CONNECTIVE CORD | SN95/PB5 , 0.6 C3A206 |
| AMP | J259 | | nsp | nsp | CONNECTIVE CORD | SN95/PB5 , 0.6 C3A206 |
| AMP | J260 | | nsp | nsp | CONNECTIVE CORD | SN95/PB5 , 0.6 C3A206 |
| AMP | J261 | | nsp | nsp | CONNECTIVE CORD | SN95/PB5 , 0.6 C3A206 |
| AMP | J262 | | nsp | nsp | CONNECTIVE CORD | SN95/PB5 , 0.6 C3A206 |
| AMP | J263 | | nsp | nsp | CONNECTIVE CORD | SN95/PB5 , 0.6 C3A206 |
| AMP | J264 | | nsp | nsp | CONNECTIVE CORD | SN95/PB5 , 0.6 C3A206 |
| AMP | J265 | | nsp | nsp | CONNECTIVE CORD | SN95/PB5 , 0.6 C3A206 |
| AMP | J266 | | nsp | nsp | CONNECTIVE CORD | SN95/PB5 , 0.6 C3A206 |
| AMP | J267 | | nsp | nsp | CONNECTIVE CORD | SN95/PB5 , 0.6 C3A206 |
| AMP | J268 | | nsp | nsp | CONNECTIVE CORD | SN95/PB5 , 0.6 C3A206 |
| AMP | J269 | | nsp | nsp | CONNECTIVE CORD | SN95/PB5 , 0.6 C3A206 |
| AMP | J270 | | nsp | nsp | CONNECTIVE CORD | SN95/PB5 , 0.6 C3A206 |
| AMP | J271 | | nsp | nsp | CONNECTIVE CORD | SN95/PB5 , 0.6 C3A206 |
| AMP | J272 | | nsp | nsp | CONNECTIVE CORD | SN95/PB5 , 0.6 C3A206 |
| AMP | J273 | | nsp | nsp | CONNECTIVE CORD | SN95/PB5 , 0.6 C3A206 |
| AMP | J274 | | nsp | nsp | CONNECTIVE CORD | SN95/PB5 , 0.6 C3A206 |
| AMP | J275 | | nsp | nsp | CONNECTIVE CORD | SN95/PB5 , 0.6 C3A206 |
| AMP | J277 | | nsp | nsp | CONNECTIVE CORD | SN95/PB5 , 0.6 C3A206 |
| AMP | J278 | | nsp | nsp | CONNECTIVE CORD | SN95/PB5 , 0.6 C3A206 |
| AMP | J279 | | nsp | nsp | CONNECTIVE CORD | SN95/PB5 , 0.6 C3A206 |
| AMP | J280 | | nsp | nsp | CONNECTIVE CORD | SN95/PB5 , 0.6 C3A206 |
| AMP | J281 | | nsp | nsp | CONNECTIVE CORD | SN95/PB5 , 0.6 C3A206 |
| AMP | J282 | | nsp | nsp | CONNECTIVE CORD | SN95/PB5 , 0.6 C3A206 |
| AMP | J283 | | nsp | nsp | CONNECTIVE CORD | SN95/PB5 , 0.6 C3A206 |
| AMP | J284 | | nsp | nsp | CONNECTIVE CORD | SN95/PB5 , 0.6 C3A206 |
| AMP | J285 | | nsp | nsp | CONNECTIVE CORD | SN95/PB5 , 0.6 C3A206 |
| AMP | J286 | | nsp | nsp | CONNECTIVE CORD | SN95/PB5 , 0.6 C3A206 |
| AMP | J287 | | nsp | nsp | CONNECTIVE CORD | SN95/PB5 , 0.6 C3A206 |
| AMP | J288 | | nsp | nsp | CONNECTIVE CORD | SN95/PB5 , 0.6 C3A206 |
| AMP | J289 | | nsp | nsp | CONNECTIVE CORD | SN95/PB5 , 0.6 C3A206 |
| AMP | J290 | | nsp | nsp | CONNECTIVE CORD | SN95/PB5 , 0.6 C3A206 |
| AMP | J291 | | nsp | nsp | CONNECTIVE CORD | SN95/PB5 , 0.6 C3A206 |
| AMP | J292 | | nsp | nsp | CONNECTIVE CORD | SN95/PB5 , 0.6 C3A206 |
| AMP | J293 | | nsp | nsp | CONNECTIVE CORD | SN95/PB5 , 0.6 C3A206 |
| AMP | J294 | | nsp | nsp | CONNECTIVE CORD | SN95/PB5 , 0.6 C3A206 |
| AMP | J295 | | nsp | nsp | CONNECTIVE CORD | SN95/PB5 , 0.6 C3A206 |
| AMP | J296 | | nsp | nsp | CONNECTIVE CORD | SN95/PB5 , 0.6 C3A206 |
| AMP | J297 | | nsp | nsp | CONNECTIVE CORD | SN95/PB5 , 0.6 C3A206 |
| AMP | J298 | | nsp | nsp | CONNECTIVE CORD | SN95/PB5 , 0.6 C3A206 |
| AMP | J299 | | nsp | nsp | CONNECTIVE CORD | SN95/PB5 , 0.6 C3A206 |
| AMP | J300 | | nsp | nsp | CONNECTIVE CORD | SN95/PB5 , 0.6 C3A206 |
| AMP | J301 | | nsp | nsp | CONNECTIVE CORD | SN95/PB5 , 0.6 C3A206 |
| AMP | J302 | | nsp | nsp | CONNECTIVE CORD | SN95/PB5 , 0.6 C3A206 |
| AMP | J303 | | nsp | nsp | CONNECTIVE CORD | SN95/PB5 , 0.6 C3A206 |
| AMP | J304 | | nsp | nsp | CONNECTIVE CORD | SN95/PB5 , 0.6 C3A206 |
| AMP | J305 | | nsp | nsp | CONNECTIVE CORD | SN95/PB5 , 0.6 C3A206 |
| AMP | J306 | | nsp | nsp | CONNECTIVE CORD | SN95/PB5 , 0.6 C3A206 |
| AMP | J307 | | nsp | nsp | CONNECTIVE CORD | SN95/PB5 , 0.6 C3A206 |
| AMP | J308 | | nsp | nsp | CONNECTIVE CORD | SN95/PB5 , 0.6 C3A206 |
| AMP | J309 | | nsp | nsp | CONNECTIVE CORD | SN95/PB5 , 0.6 C3A206 |
| AMP | J310 | | nsp | nsp | CONNECTIVE CORD | SN95/PB5 , 0.6 C3A206 |
| AMP | J311 | | nsp | nsp | CONNECTIVE CORD | SN95/PB5 , 0.6 C3A206 |
| AMP | J312 | | nsp | nsp | CONNECTIVE CORD | SN95/PB5 , 0.6 C3A206 |
| AMP | J313 | | nsp | nsp | CONNECTIVE CORD | SN95/PB5 , 0.6 C3A206 |
| AMP | J314 | | nsp | nsp | CONNECTIVE CORD | SN95/PB5 , 0.6 C3A206 |
| AMP | J315 | | nsp | nsp | CONNECTIVE CORD | SN95/PB5 , 0.6 C3A206 |
| AMP | J316 | | nsp | nsp | CONNECTIVE CORD | SN95/PB5 , 0.6 C3A206 |
| AMP | J317 | | nsp | nsp | CONNECTIVE CORD | SN95/PB5 , 0.6 C3A206 |
| AMP | J318 | | nsp | nsp | CONNECTIVE CORD | SN95/PB5 , 0.6 C3A206 |
| AMP | J319 | | nsp | nsp | CONNECTIVE CORD | SN95/PB5 , 0.6 C3A206 |
| AMP | J320 | | nsp | nsp | CONNECTIVE CORD | SN95/PB5 , 0.6 C3A206 |
| AMP | J321 | | nsp | nsp | CONNECTIVE CORD | SN95/PB5 , 0.6 C3A206 |
| AMP | J322 | | nsp | nsp | CONNECTIVE CORD | SN95/PB5 , 0.6 C3A206 |

NOTE : “nsp” PARTS IS LISTED FOR REFERENCE ONLY, MARANTZ WILL NOT SUPPLY THESE PARTS.

| P.C.B. NAME | POS. NO. | VERS. COLOR | PART NO. (FOR EUR) | PART NO. (MJI) | PART NAME | DESCRIPTION | |
|---|---|---|---|---|---|---|---|
| AMP | J323 | | nsp | nsp | CONNECTIVE CORD | SN95/PB5 , 0.6 | C3A206 |
| AMP | J324 | | nsp | nsp | CONNECTIVE CORD | SN95/PB5 , 0.6 | C3A206 |
| AMP | J325 | | nsp | nsp | CONNECTIVE CORD | SN95/PB5 , 0.6 | C3A206 |
| AMP | J326 | | nsp | nsp | CONNECTIVE CORD | SN95/PB5 , 0.6 | C3A206 |
| AMP | J327 | | nsp | nsp | CONNECTIVE CORD | SN95/PB5 , 0.6 | C3A206 |
| AMP | J328 | | nsp | nsp | CONNECTIVE CORD | SN95/PB5 , 0.6 | C3A206 |
| AMP | J329 | | nsp | nsp | CONNECTIVE CORD | SN95/PB5 , 0.6 | C3A206 |
| AMP | J330 | | nsp | nsp | CONNECTIVE CORD | SN95/PB5 , 0.6 | C3A206 |
| AMP | J331 | | nsp | nsp | CONNECTIVE CORD | SN95/PB5 , 0.6 | C3A206 |
| AMP | J332 | | nsp | nsp | CONNECTIVE CORD | SN95/PB5 , 0.6 | C3A206 |
| AMP | J333 | | nsp | nsp | CONNECTIVE CORD | SN95/PB5 , 0.6 | C3A206 |
| AMP | J335 | | nsp | nsp | CONNECTIVE CORD | SN95/PB5 , 0.6 | C3A206 |
| AMP | Q403 | | 90M-HT600010R | 90M-HT600010R | TRANSISTOR | TKTA1266YT | HVTKTA1266YT |
| AMP | Q404 | | 90M-HT600010R | 90M-HT600010R | TRANSISTOR | TKTA1266YT | HVTKTA1266YT |
| AMP | Q405 | | 90M-HT800050R | 90M-HT800050R | TRANSISTOR | | HVTKTC3198YT |
| AMP | Q406 | | 90M-HT800050R | 90M-HT800050R | TRANSISTOR | | HVTKTC3198YT |
| AMP | Q407 | | 90M-HT600020R | 90M-HT600020R | TRANSISTOR | KTA1268GR | HVTKTA1268GRT |
| AMP | Q408 | | 90M-HT600020R | 90M-HT600020R | TRANSISTOR | KTA1268GR | HVTKTA1268GRT |
| AMP | Q409 | | 90M-HT600020R | 90M-HT600020R | TRANSISTOR | KTA1268GR | HVTKTA1268GRT |
| AMP | Q410 | | 90M-HT600020R | 90M-HT600020R | TRANSISTOR | KTA1268GR | HVTKTA1268GRT |
| AMP | Q411 | | 90M-HT800060R | 90M-HT800060R | TRANSISTOR | KTC3200GR | HVTKTC3200GRT |
| AMP | Q412 | | 90M-HT800060R | 90M-HT800060R | TRANSISTOR | KTC3200GR | HVTKTC3200GRT |
| AMP | Q413 | | 90M-HT800060R | 90M-HT800060R | TRANSISTOR | KTC3200GR | HVTKTC3200GRT |
| AMP | Q414 | | 90M-HT800060R | 90M-HT800060R | TRANSISTOR | KTC3200GR | HVTKTC3200GRT |
| AMP | Q415 | | 90M-HT600030R | 90M-HT600030R | TRANSISTOR | | HVTKTA1024YT |
| AMP | Q416 | | 90M-HT600030R | 90M-HT600030R | TRANSISTOR | | HVTKTA1024YT |
| AMP | Q417 | | 90M-HT800090R | 90M-HT800090R | TRANSISTOR | | HVTKTC3206YAT |
| AMP | Q418 | | 90M-HT800090R | 90M-HT800090R | TRANSISTOR | | HVTKTC3206YAT |
| AMP | Q419 | | 00MHC20002080 | 00MHC20002080 | IC | SAP17NLFNO.552 | BVISAP17N |
| AMP | Q420 | | 00MHC20002080 | 00MHC20002080 | IC | SAP17NLFNO.552 | BVISAP17N |
| AMP | Q421 | | 00MHC20001080 | 00MHC20001080 | IC | SAP17PLFNO.552 | BVISAP17P |
| AMP | Q422 | | 00MHC20001080 | 00MHC20001080 | IC | SAP17PLFNO.552 | BVISAP17P |
| AMP | Q423 | | 90M-HT800060R | 90M-HT800060R | TRANSISTOR | KTC3200GR | HVTKTC3200GRT |
| AMP | Q424 | | 90M-HT800060R | 90M-HT800060R | TRANSISTOR | KTC3200GR | HVTKTC3200GRT |
| AMP | Q503 | | 90M-HT600010R | 90M-HT600010R | TRANSISTOR | TKTA1266YT | HVTKTA1266YT |
| AMP | Q504 | | 90M-HT600010R | 90M-HT600010R | TRANSISTOR | TKTA1266YT | HVTKTA1266YT |
| AMP | Q505 | | 90M-HT800050R | 90M-HT800050R | TRANSISTOR | | HVTKTC3198YT |
| AMP | Q506 | | 90M-HT800050R | 90M-HT800050R | TRANSISTOR | | HVTKTC3198YT |
| AMP | Q507 | | 90M-HT600020R | 90M-HT600020R | TRANSISTOR | KTA1268GR | HVTKTA1268GRT |
| AMP | Q508 | | 90M-HT600020R | 90M-HT600020R | TRANSISTOR | KTA1268GR | HVTKTA1268GRT |
| AMP | Q509 | | 90M-HT600020R | 90M-HT600020R | TRANSISTOR | KTA1268GR | HVTKTA1268GRT |
| AMP | Q510 | | 90M-HT600020R | 90M-HT600020R | TRANSISTOR | KTA1268GR | HVTKTA1268GRT |
| AMP | Q511 | | 90M-HT800060R | 90M-HT800060R | TRANSISTOR | KTC3200GR | HVTKTC3200GRT |
| AMP | Q512 | | 90M-HT800060R | 90M-HT800060R | TRANSISTOR | KTC3200GR | HVTKTC3200GRT |
| AMP | Q513 | | 90M-HT800060R | 90M-HT800060R | TRANSISTOR | KTC3200GR | HVTKTC3200GRT |
| AMP | Q514 | | 90M-HT800060R | 90M-HT800060R | TRANSISTOR | KTC3200GR | HVTKTC3200GRT |
| AMP | Q515 | | 90M-HT600030R | 90M-HT600030R | TRANSISTOR | | HVTKTA1024YT |
| AMP | Q516 | | 90M-HT600030R | 90M-HT600030R | TRANSISTOR | | HVTKTA1024YT |
| AMP | Q517 | | 90M-HT800090R | 90M-HT800090R | TRANSISTOR | | HVTKTC3206YAT |
| AMP | Q518 | | 90M-HT800090R | 90M-HT800090R | TRANSISTOR | | HVTKTC3206YAT |
| AMP | Q519 | | 00MHC20002080 | 00MHC20002080 | IC | SAP17NLFNO.552 | BVISAP17N |
| AMP | Q520 | | 00MHC20002080 | 00MHC20002080 | IC | SAP17NLFNO.552 | BVISAP17N |
| AMP | Q521 | | 00MHC20001080 | 00MHC20001080 | IC | SAP17PLFNO.552 | BVISAP17P |
| AMP | Q522 | | 00MHC20001080 | 00MHC20001080 | IC | SAP17PLFNO.552 | BVISAP17P |
| AMP | Q523 | | 90M-HT800060R | 90M-HT800060R | TRANSISTOR | KTC3200GR | HVTKTC3200GRT |
| AMP | Q524 | | 90M-HT800060R | 90M-HT800060R | TRANSISTOR | KTC3200GR | HVTKTC3200GRT |
| AMP | Q603 | | 90M-HT600010R | 90M-HT600010R | TRANSISTOR | TKTA1266YT | HVTKTA1266YT |
| AMP | Q604 | | 90M-HT600010R | 90M-HT600010R | TRANSISTOR | TKTA1266YT | HVTKTA1266YT |
| AMP | Q605 | | 90M-HT800050R | 90M-HT800050R | TRANSISTOR | | HVTKTC3198YT |
| AMP | Q606 | | 90M-HT800050R | 90M-HT800050R | TRANSISTOR | | HVTKTC3198YT |
| AMP | Q607 | | 90M-HT600020R | 90M-HT600020R | TRANSISTOR | KTA1268GR | HVTKTA1268GRT |
| AMP | Q608 | | 90M-HT600020R | 90M-HT600020R | TRANSISTOR | KTA1268GR | HVTKTA1268GRT |
| AMP | Q609 | | 90M-HT600020R | 90M-HT600020R | TRANSISTOR | KTA1268GR | HVTKTA1268GRT |
| AMP | Q610 | | 90M-HT600020R | 90M-HT600020R | TRANSISTOR | KTA1268GR | HVTKTA1268GRT |
| AMP | Q611 | | 90M-HT800060R | 90M-HT800060R | TRANSISTOR | KTC3200GR | HVTKTC3200GRT |
| AMP | Q612 | | 90M-HT800060R | 90M-HT800060R | TRANSISTOR | KTC3200GR | HVTKTC3200GRT |
| AMP | Q613 | | 90M-HT800060R | 90M-HT800060R | TRANSISTOR | KTC3200GR | HVTKTC3200GRT |
| AMP | Q614 | | 90M-HT800060R | 90M-HT800060R | TRANSISTOR | KTC3200GR | HVTKTC3200GRT |

NOTE : “nsp” PARTS IS LISTED FOR REFERENCE ONLY, MARANTZ WILL NOT SUPPLY THESE PARTS.

| P.C.B. NAME | POS. NO. | VERS. COLOR | PART NO. (FOR EUR) | PART NO. (MJI) | PART NAME | DESCRIPTION | |
|---|---|---|---|---|---|---|---|
| AMP | Q615 | | 90M-HT600030R | 90M-HT600030R | TRANSISTOR | | HVTKTA1024YT |
| AMP | Q616 | | 90M-HT600030R | 90M-HT600030R | TRANSISTOR | | HVTKTA1024YT |
| AMP | Q617 | | 90M-HT800090R | 90M-HT800090R | TRANSISTOR | | HVTKTC3206YAT |
| AMP | Q618 | | 90M-HT800090R | 90M-HT800090R | TRANSISTOR | | HVTKTC3206YAT |
| AMP | Q619 | | 00MHC20002080 | 00MHC20002080 | IC | SAP17NLFNO.552 | BVISAP17N |
| AMP | Q620 | | 00MHC20002080 | 00MHC20002080 | IC | SAP17NLFNO.552 | BVISAP17N |
| AMP | Q621 | | 00MHC20001080 | 00MHC20001080 | IC | SAP17PLFNO.552 | BVISAP17P |
| AMP | Q622 | | 00MHC20001080 | 00MHC20001080 | IC | SAP17PLFNO.552 | BVISAP17P |
| AMP | Q623 | | 90M-HT800060R | 90M-HT800060R | TRANSISTOR | KTC3200GR | HVTKTC3200GRT |
| AMP | Q624 | | 90M-HT800060R | 90M-HT800060R | TRANSISTOR | KTC3200GR | HVTKTC3200GRT |
| AMP | Q703 | | 90M-HT600010R | 90M-HT600010R | TRANSISTOR | TKTA1266YT | HVTKTA1266YT |
| AMP | Q705 | | 90M-HT800050R | 90M-HT800050R | TRANSISTOR | | HVTKTC3198YT |
| AMP | Q707 | | 90M-HT600020R | 90M-HT600020R | TRANSISTOR | KTA1268GR | HVTKTA1268GRT |
| AMP | Q709 | | 90M-HT600020R | 90M-HT600020R | TRANSISTOR | KTA1268GR | HVTKTA1268GRT |
| AMP | Q711 | | 90M-HT800060R | 90M-HT800060R | TRANSISTOR | KTC3200GR | HVTKTC3200GRT |
| AMP | Q713 | | 90M-HT800060R | 90M-HT800060R | TRANSISTOR | KTC3200GR | HVTKTC3200GRT |
| AMP | Q715 | | 90M-HT600030R | 90M-HT600030R | TRANSISTOR | | HVTKTA1024YT |
| AMP | Q717 | | 90M-HT800090R | 90M-HT800090R | TRANSISTOR | | HVTKTC3206YAT |
| AMP | Q719 | | 00MHC20002080 | 00MHC20002080 | IC | SAP17NLFNO.552 | BVISAP17N |
| AMP | Q721 | | 00MHC20001080 | 00MHC20001080 | IC | SAP17PLFNO.552 | BVISAP17P |
| AMP | Q723 | | 90M-HT800060R | 90M-HT800060R | TRANSISTOR | KTC3200GR | HVTKTC3200GRT |
| AMP | Q801 | | 90M-HT600020R | 90M-HT600020R | TRANSISTOR | KTA1268GR | HVTKTA1268GRT |
| AMP | Q803 | | 90M-HT800050R | 90M-HT800050R | TRANSISTOR | | HVTKTC3198YT |
| AMP | Q804 | | 00MBA20001000 | 00MBA20001000 | TRANSISTOR | KRC102M | HVTKRC102MT |
| AMP | R401 | | nsp | nsp | RESISTOR | 33K OHM 1/5W J | CRD20TJ333T |
| AMP | R402 | | nsp | nsp | RESISTOR | 33K OHM 1/5W J | CRD20TJ333T |
| AMP | R403 | | nsp | nsp | RESISTOR | 1K OHM 1/5W J | CRD20TJ102T |
| AMP | R404 | | nsp | nsp | RESISTOR | 1K OHM 1/5W J | CRD20TJ102T |
| AMP | R405 | | nsp | nsp | RESISTOR | 100 OHM 1/5W J | CRD20TJ101T |
| AMP | R406 | | nsp | nsp | RESISTOR | 100 OHM 1/5W J | CRD20TJ101T |
| AMP | R407 | | nsp | nsp | RESISTOR | 10K OHM 1/5W J | CRD20TJ103T |
| AMP | R408 | | nsp | nsp | RESISTOR | 10K OHM 1/5W J | CRD20TJ103T |
| AMP | R409 | | nsp | nsp | RESISTOR | 10K OHM 1/5W J | CRD20TJ103T |
| AMP | R410 | | nsp | nsp | RESISTOR | 10K OHM 1/5W J | CRD20TJ103T |
| AMP | R411 | | nsp | nsp | RESISTOR | 470 OHM 1/5W J | CRD20TJ471T |
| AMP | R412 | | nsp | nsp | RESISTOR | 470 OHM 1/5W J | CRD20TJ471T |
| AMP | R413 | | nsp | nsp | RESISTOR | 470 OHM 1/5W J | CRD20TJ471T |
| AMP | R414 | | nsp | nsp | RESISTOR | 470 OHM 1/5W J | CRD20TJ471T |
| AMP | R415 | | nsp | nsp | RESISTOR | 68 OHM 1/5W J | CRD20TJ680T |
| AMP | R416 | | nsp | nsp | RESISTOR | 68 OHM 1/5W J | CRD20TJ680T |
| AMP | R417 | | nsp | nsp | RESISTOR | 68 OHM 1/5W J | CRD20TJ680T |
| AMP | R418 | | nsp | nsp | RESISTOR | 68 OHM 1/5W J | CRD20TJ680T |
| AMP | R419 | | 00MNB51514240 | 00MNB51514240 | KANON-RESISTER | LT24001/6S J | HRT16C1512400JT |
| AMP | R420 | | 00MNB51514240 | 00MNB51514240 | KANON-RESISTER | LT24001/6S J | HRT16C1512400JT |
| AMP | R421 | | 00MNB51514240 | 00MNB51514240 | KANON-RESISTER | LT24001/6S J | HRT16C1512400JT |
| AMP | R422 | | 00MNB51514240 | 00MNB51514240 | KANON-RESISTER | LT24001/6S J | HRT16C1512400JT |
| AMP | R423 | | nsp | nsp | RESISTOR | 330K OHM 1/5W | CRD20TJ334T |
| AMP | R424 | | nsp | nsp | RESISTOR | 330K OHM 1/5W | CRD20TJ334T |
| AMP | R425 | | nsp | nsp | RESISTOR | 330K OHM 1/5W | CRD20TJ334T |
| AMP | R426 | | nsp | nsp | RESISTOR | 330K OHM 1/5W | CRD20TJ334T |
| AMP | R427 | | nsp | nsp | RESISTOR | 100 OHM 1/5W J | CRD20TJ101T |
| AMP | R428 | | nsp | nsp | RESISTOR | 100 OHM 1/5W J | CRD20TJ101T |
| AMP | R429 | | nsp | nsp | RESISTOR | 100 OHM 1/5W J | CRD20TJ101T |
| AMP | R430 | | nsp | nsp | RESISTOR | 100 OHM 1/5W J | CRD20TJ101T |
| AMP | R431 | | nsp | nsp | RESISTOR | 10 OHM 1/4W | CRD25TJ100T |
| AMP | R432 | | nsp | nsp | RESISTOR | 10 OHM 1/4W | CRD25TJ100T |
| AMP | R433 | | nsp | nsp | RESISTOR | 10 OHM 1/4W | CRD25TJ100T |
| AMP | R434 | | nsp | nsp | RESISTOR | 10 OHM 1/4W | CRD25TJ100T |
| AMP | R435 | | nsp | nsp | RESISTOR | 27 OHM 1/5W J | CRD20TJ270T |
| AMP | R436 | | nsp | nsp | RESISTOR | 27 OHM 1/5W J | CRD20TJ270T |
| AMP | R439 | | nsp | nsp | RESISTOR | 120 OHM 1W J | KRG1SANJ121RT |
| AMP | R440 | | nsp | nsp | RESISTOR | 120 OHM 1W J | KRG1SANJ121RT |
| AMP | R441 | | nsp | nsp | RESISTOR | 120 OHM 1W J | KRG1SANJ121RT |
| AMP | R442 | | nsp | nsp | RESISTOR | 120 OHM 1W J | KRG1SANJ121RT |
| AMP | R443 | | nsp | nsp | RESISTOR | 120 OHM 1W J | KRG1SANJ121RT |
| AMP | R444 | | nsp | nsp | RESISTOR | 120 OHM 1W J | KRG1SANJ121RT |
| AMP | R445 | | nsp | nsp | RESISTOR | 47 OHM 1W J | KRG1SANJ470RT |
| AMP | R446 | | nsp | nsp | RESISTOR | 47 OHM 1W J | KRG1SANJ470RT |

NOTE : “nsp” PARTS IS LISTED FOR REFERENCE ONLY, MARANTZ WILL NOT SUPPLY THESE PARTS.

| P.C.B. NAME | POS. NO. | VERS. COLOR | PART NO. (FOR EUR) | PART NO. (MJI) | PART NAME | DESCRIPTION | |
|---|---|---|---|---|---|---|---|
| AMP | R449 | | nsp | nsp | RESISTOR | 15 OHM 1/5W J | CRD20TJ150T |
| AMP | R450 | | nsp | nsp | RESISTOR | 15 OHM 1/5W J | CRD20TJ150T |
| AMP | R451 | | nsp | nsp | RESISTOR | 10 OHM 1/5W J | CRD20TJ100T |
| AMP | R452 | | nsp | nsp | RESISTOR | 10 OHM 1/5W J | CRD20TJ100T |
| AMP | R453 | | nsp | nsp | RESISTOR | 1K OHM 1/5W J | CRD20TJ102T |
| AMP | R454 | | nsp | nsp | RESISTOR | 1K OHM 1/5W J | CRD20TJ102T |
| AMP | R455 | | nsp | nsp | RESISTOR | 1K OHM 1/5W J | CRD20TJ102T |
| AMP | R456 | | nsp | nsp | RESISTOR | 1K OHM 1/5W J | CRD20TJ102T |
| AMP | R457 | | nsp | nsp | RESISTOR | 680 OHM 1/5W J | CRD20TJ681T |
| AMP | R458 | | nsp | nsp | RESISTOR | 680 OHM 1/5W J | CRD20TJ681T |
| AMP | R459 | | nsp | nsp | RESISTOR | 39K OHM 1/5W | CRD20TJ393T |
| AMP | R460 | | nsp | nsp | RESISTOR | 39K OHM 1/5W | CRD20TJ393T |
| AMP | R461 | | nsp | nsp | RESISTOR | 39K OHM 1/5W | CRD20TJ393T |
| AMP | R462 | | nsp | nsp | RESISTOR | 39K OHM 1/5W | CRD20TJ393T |
| AMP | R463 | | nsp | nsp | RESISTOR | 22K OHM 1/5W J | CRD20TJ223T |
| AMP | R464 | | nsp | nsp | RESISTOR | 22K OHM 1/5W J | CRD20TJ223T |
| AMP | R465 | | nsp | nsp | RESISTOR | 620 OHM 1/5W J | CRD20TJ621T |
| AMP | R466 | | nsp | nsp | RESISTOR | 620 OHM 1/5W J | CRD20TJ621T |
| AMP | R467 | | nsp | nsp | RESISTOR | 33K OHM 1/5W J | CRD20TJ333T |
| AMP | R468 | | nsp | nsp | RESISTOR | 33K OHM 1/5W J | CRD20TJ333T |
| AMP | R469 | | nsp | nsp | RESISTOR | 22K OHM 1/5W J | CRD20TJ223T |
| AMP | R470 | | nsp | nsp | RESISTOR | 22K OHM 1/5W J | CRD20TJ223T |
| AMP | R501 | | nsp | nsp | RESISTOR | 33K OHM 1/5W J | CRD20TJ333T |
| AMP | R502 | | nsp | nsp | RESISTOR | 33K OHM 1/5W J | CRD20TJ333T |
| AMP | R503 | | nsp | nsp | RESISTOR | 1K OHM 1/5W J | CRD20TJ102T |
| AMP | R504 | | nsp | nsp | RESISTOR | 1K OHM 1/5W J | CRD20TJ102T |
| AMP | R505 | | nsp | nsp | RESISTOR | 100 OHM 1/5W J | CRD20TJ101T |
| AMP | R506 | | nsp | nsp | RESISTOR | 100 OHM 1/5W J | CRD20TJ101T |
| AMP | R507 | | nsp | nsp | RESISTOR | 10K OHM 1/5W J | CRD20TJ103T |
| AMP | R508 | | nsp | nsp | RESISTOR | 10K OHM 1/5W J | CRD20TJ103T |
| AMP | R509 | | nsp | nsp | RESISTOR | 10K OHM 1/5W J | CRD20TJ103T |
| AMP | R510 | | nsp | nsp | RESISTOR | 10K OHM 1/5W J | CRD20TJ103T |
| AMP | R511 | | nsp | nsp | RESISTOR | 470 OHM 1/5W J | CRD20TJ471T |
| AMP | R512 | | nsp | nsp | RESISTOR | 470 OHM 1/5W J | CRD20TJ471T |
| AMP | R513 | | nsp | nsp | RESISTOR | 470 OHM 1/5W J | CRD20TJ471T |
| AMP | R514 | | nsp | nsp | RESISTOR | 470 OHM 1/5W J | CRD20TJ471T |
| AMP | R515 | | nsp | nsp | RESISTOR | 68 OHM 1/5W J | CRD20TJ680T |
| AMP | R516 | | nsp | nsp | RESISTOR | 68 OHM 1/5W J | CRD20TJ680T |
| AMP | R517 | | nsp | nsp | RESISTOR | 68 OHM 1/5W J | CRD20TJ680T |
| AMP | R518 | | nsp | nsp | RESISTOR | 68 OHM 1/5W J | CRD20TJ680T |
| AMP | R519 | | 00MNB51514240 | 00MNB51514240 | KANON-RESISTER | LT24001/6S J | HRT16C1512400JT |
| AMP | R520 | | 00MNB51514240 | 00MNB51514240 | KANON-RESISTER | LT24001/6S J | HRT16C1512400JT |
| AMP | R521 | | 00MNB51514240 | 00MNB51514240 | KANON-RESISTER | LT24001/6S J | HRT16C1512400JT |
| AMP | R522 | | 00MNB51514240 | 00MNB51514240 | KANON-RESISTER | LT24001/6S J | HRT16C1512400JT |
| AMP | R523 | | nsp | nsp | RESISTOR | 330K OHM 1/5W | CRD20TJ334T |
| AMP | R524 | | nsp | nsp | RESISTOR | 330K OHM 1/5W | CRD20TJ334T |
| AMP | R525 | | nsp | nsp | RESISTOR | 330K OHM 1/5W | CRD20TJ334T |
| AMP | R526 | | nsp | nsp | RESISTOR | 330K OHM 1/5W | CRD20TJ334T |
| AMP | R527 | | nsp | nsp | RESISTOR | 100 OHM 1/5W J | CRD20TJ101T |
| AMP | R528 | | nsp | nsp | RESISTOR | 100 OHM 1/5W J | CRD20TJ101T |
| AMP | R529 | | nsp | nsp | RESISTOR | 100 OHM 1/5W J | CRD20TJ101T |
| AMP | R530 | | nsp | nsp | RESISTOR | 100 OHM 1/5W J | CRD20TJ101T |
| AMP | R531 | | nsp | nsp | RESISTOR | 10 OHM 1/4W | CRD25TJ100T |
| AMP | R532 | | nsp | nsp | RESISTOR | 10 OHM 1/4W | CRD25TJ100T |
| AMP | R533 | | nsp | nsp | RESISTOR | 10 OHM 1/4W | CRD25TJ100T |
| AMP | R534 | | nsp | nsp | RESISTOR | 10 OHM 1/4W | CRD25TJ100T |
| AMP | R535 | | nsp | nsp | RESISTOR | 27 OHM 1/5W J | CRD20TJ270T |
| AMP | R536 | | nsp | nsp | RESISTOR | 27 OHM 1/5W J | CRD20TJ270T |
| AMP | R539 | | nsp | nsp | RESISTOR | 120 OHM 1W J | KRG1SANJ121RT |
| AMP | R540 | | nsp | nsp | RESISTOR | 120 OHM 1W J | KRG1SANJ121RT |
| AMP | R541 | | nsp | nsp | RESISTOR | 120 OHM 1W J | KRG1SANJ121RT |
| AMP | R542 | | nsp | nsp | RESISTOR | 120 OHM 1W J | KRG1SANJ121RT |
| AMP | R543 | | nsp | nsp | RESISTOR | 120 OHM 1W J | KRG1SANJ121RT |
| AMP | R544 | | nsp | nsp | RESISTOR | 120 OHM 1W J | KRG1SANJ121RT |
| AMP | R545 | | nsp | nsp | RESISTOR | 47 OHM 1W J | KRG1SANJ470RT |
| AMP | R546 | | nsp | nsp | RESISTOR | 47 OHM 1W J | KRG1SANJ470RT |
| AMP | R549 | | nsp | nsp | RESISTOR | 15 OHM 1/5W J | CRD20TJ150T |
| AMP | R550 | | nsp | nsp | RESISTOR | 15 OHM 1/5W J | CRD20TJ150T |

NOTE : “nsp” PARTS IS LISTED FOR REFERENCE ONLY, MARANTZ WILL NOT SUPPLY THESE PARTS.

| P.C.B. NAME | POS. NO. | VERS. COLOR | PART NO. (FOR EUR) | PART NO. (MJI) | PART NAME | DESCRIPTION | |
|---|---|---|---|---|---|---|---|
| AMP | R551 | | nsp | nsp | RESISTOR | 10 OHM 1/5W J | CRD20TJ100T |
| AMP | R552 | | nsp | nsp | RESISTOR | 10 OHM 1/5W J | CRD20TJ100T |
| AMP | R553 | | nsp | nsp | RESISTOR | 1K OHM 1/5W J | CRD20TJ102T |
| AMP | R554 | | nsp | nsp | RESISTOR | 1K OHM 1/5W J | CRD20TJ102T |
| AMP | R555 | | nsp | nsp | RESISTOR | 1K OHM 1/5W J | CRD20TJ102T |
| AMP | R556 | | nsp | nsp | RESISTOR | 1K OHM 1/5W J | CRD20TJ102T |
| AMP | R557 | | nsp | nsp | RESISTOR | 680 OHM 1/5W J | CRD20TJ681T |
| AMP | R558 | | nsp | nsp | RESISTOR | 680 OHM 1/5W J | CRD20TJ681T |
| AMP | R559 | | nsp | nsp | RESISTOR | 39K OHM 1/5W | CRD20TJ393T |
| AMP | R560 | | nsp | nsp | RESISTOR | 39K OHM 1/5W | CRD20TJ393T |
| AMP | R561 | | nsp | nsp | RESISTOR | 39K OHM 1/5W | CRD20TJ393T |
| AMP | R562 | | nsp | nsp | RESISTOR | 39K OHM 1/5W | CRD20TJ393T |
| AMP | R563 | | nsp | nsp | RESISTOR | 22K OHM 1/5W J | CRD20TJ223T |
| AMP | R564 | | nsp | nsp | RESISTOR | 22K OHM 1/5W J | CRD20TJ223T |
| AMP | R565 | | nsp | nsp | RESISTOR | 620 OHM 1/5W J | CRD20TJ621T |
| AMP | R566 | | nsp | nsp | RESISTOR | 620 OHM 1/5W J | CRD20TJ621T |
| AMP | R567 | | nsp | nsp | RESISTOR | 33K OHM 1/5W J | CRD20TJ333T |
| AMP | R568 | | nsp | nsp | RESISTOR | 33K OHM 1/5W J | CRD20TJ333T |
| AMP | R569 | | nsp | nsp | RESISTOR | 22K OHM 1/5W J | CRD20TJ223T |
| AMP | R570 | | nsp | nsp | RESISTOR | 22K OHM 1/5W J | CRD20TJ223T |
| AMP | R601 | | nsp | nsp | RESISTOR | 33K OHM 1/5W J | CRD20TJ333T |
| AMP | R602 | | nsp | nsp | RESISTOR | 33K OHM 1/5W J | CRD20TJ333T |
| AMP | R603 | | nsp | nsp | RESISTOR | 1K OHM 1/5W J | CRD20TJ102T |
| AMP | R604 | | nsp | nsp | RESISTOR | 1K OHM 1/5W J | CRD20TJ102T |
| AMP | R605 | | nsp | nsp | RESISTOR | 100 OHM 1/5W J | CRD20TJ101T |
| AMP | R606 | | nsp | nsp | RESISTOR | 100 OHM 1/5W J | CRD20TJ101T |
| AMP | R607 | | nsp | nsp | RESISTOR | 10K OHM 1/5W J | CRD20TJ103T |
| AMP | R608 | | nsp | nsp | RESISTOR | 10K OHM 1/5W J | CRD20TJ103T |
| AMP | R609 | | nsp | nsp | RESISTOR | 10K OHM 1/5W J | CRD20TJ103T |
| AMP | R610 | | nsp | nsp | RESISTOR | 10K OHM 1/5W J | CRD20TJ103T |
| AMP | R611 | | nsp | nsp | RESISTOR | 470 OHM 1/5W J | CRD20TJ471T |
| AMP | R612 | | nsp | nsp | RESISTOR | 470 OHM 1/5W J | CRD20TJ471T |
| AMP | R613 | | nsp | nsp | RESISTOR | 470 OHM 1/5W J | CRD20TJ471T |
| AMP | R614 | | nsp | nsp | RESISTOR | 470 OHM 1/5W J | CRD20TJ471T |
| AMP | R615 | | nsp | nsp | RESISTOR | 68 OHM 1/5W J | CRD20TJ680T |
| AMP | R616 | | nsp | nsp | RESISTOR | 68 OHM 1/5W J | CRD20TJ680T |
| AMP | R617 | | nsp | nsp | RESISTOR | 68 OHM 1/5W J | CRD20TJ680T |
| AMP | R618 | | nsp | nsp | RESISTOR | 68 OHM 1/5W J | CRD20TJ680T |
| AMP | R619 | | 00MNB51514240 | 00MNB51514240 | KANON-RESISTER | LT24001/6S J | HRT16C1512400JT |
| AMP | R620 | | 00MNB51514240 | 00MNB51514240 | KANON-RESISTER | LT24001/6S J | HRT16C1512400JT |
| AMP | R621 | | 00MNB51514240 | 00MNB51514240 | KANON-RESISTER | LT24001/6S J | HRT16C1512400JT |
| AMP | R622 | | 00MNB51514240 | 00MNB51514240 | KANON-RESISTER | LT24001/6S J | HRT16C1512400JT |
| AMP | R623 | | nsp | nsp | RESISTOR | 330K OHM 1/5W | CRD20TJ334T |
| AMP | R624 | | nsp | nsp | RESISTOR | 330K OHM 1/5W | CRD20TJ334T |
| AMP | R625 | | nsp | nsp | RESISTOR | 330K OHM 1/5W | CRD20TJ334T |
| AMP | R626 | | nsp | nsp | RESISTOR | 330K OHM 1/5W | CRD20TJ334T |
| AMP | R627 | | nsp | nsp | RESISTOR | 100 OHM 1/5W J | CRD20TJ101T |
| AMP | R628 | | nsp | nsp | RESISTOR | 100 OHM 1/5W J | CRD20TJ101T |
| AMP | R629 | | nsp | nsp | RESISTOR | 100 OHM 1/5W J | CRD20TJ101T |
| AMP | R630 | | nsp | nsp | RESISTOR | 100 OHM 1/5W J | CRD20TJ101T |
| AMP | R631 | | nsp | nsp | RESISTOR | 10 OHM 1/4W | CRD25TJ100T |
| AMP | R632 | | nsp | nsp | RESISTOR | 10 OHM 1/4W | CRD25TJ100T |
| AMP | R633 | | nsp | nsp | RESISTOR | 10 OHM 1/4W | CRD25TJ100T |
| AMP | R634 | | nsp | nsp | RESISTOR | 10 OHM 1/4W | CRD25TJ100T |
| AMP | R635 | | nsp | nsp | RESISTOR | 27 OHM 1/5W J | CRD20TJ270T |
| AMP | R636 | | nsp | nsp | RESISTOR | 27 OHM 1/5W J | CRD20TJ270T |
| AMP | R639 | | nsp | nsp | RESISTOR | 120 OHM 1W J | KRG1SANJ121RT |
| AMP | R640 | | nsp | nsp | RESISTOR | 120 OHM 1W J | KRG1SANJ121RT |
| AMP | R641 | | nsp | nsp | RESISTOR | 120 OHM 1W J | KRG1SANJ121RT |
| AMP | R642 | | nsp | nsp | RESISTOR | 120 OHM 1W J | KRG1SANJ121RT |
| AMP | R643 | | nsp | nsp | RESISTOR | 120 OHM 1W J | KRG1SANJ121RT |
| AMP | R644 | | nsp | nsp | RESISTOR | 120 OHM 1W J | KRG1SANJ121RT |
| AMP | R645 | | nsp | nsp | RESISTOR | 47 OHM 1W J | KRG1SANJ470RT |
| AMP | R646 | | nsp | nsp | RESISTOR | 47 OHM 1W J | KRG1SANJ470RT |
| AMP | R649 | | nsp | nsp | RESISTOR | 15 OHM 1/5W J | CRD20TJ150T |
| AMP | R650 | | nsp | nsp | RESISTOR | 15 OHM 1/5W J | CRD20TJ150T |
| AMP | R651 | | nsp | nsp | RESISTOR | 10 OHM 1/5W J | CRD20TJ100T |
| AMP | R652 | | nsp | nsp | RESISTOR | 10 OHM 1/5W J | CRD20TJ100T |

NOTE : “nsp” PARTS IS LISTED FOR REFERENCE ONLY, MARANTZ WILL NOT SUPPLY THESE PARTS.

| P.C.B. NAME | POS. NO. | VERS. COLOR | PART NO. (FOR EUR) | PART NO. (MJI) | PART NAME | DESCRIPTION | |
|---|---|---|---|---|---|---|---|
| AMP | R653 | | nsp | nsp | RESISTOR | 1K OHM 1/5W J | CRD20TJ102T |
| AMP | R654 | | nsp | nsp | RESISTOR | 1K OHM 1/5W J | CRD20TJ102T |
| AMP | R655 | | nsp | nsp | RESISTOR | 1K OHM 1/5W J | CRD20TJ102T |
| AMP | R656 | | nsp | nsp | RESISTOR | 1K OHM 1/5W J | CRD20TJ102T |
| AMP | R657 | | nsp | nsp | RESISTOR | 680 OHM 1/5W J | CRD20TJ681T |
| AMP | R658 | | nsp | nsp | RESISTOR | 680 OHM 1/5W J | CRD20TJ681T |
| AMP | R659 | | nsp | nsp | RESISTOR | 39K OHM 1/5W | CRD20TJ393T |
| AMP | R660 | | nsp | nsp | RESISTOR | 39K OHM 1/5W | CRD20TJ393T |
| AMP | R661 | | nsp | nsp | RESISTOR | 39K OHM 1/5W | CRD20TJ393T |
| AMP | R662 | | nsp | nsp | RESISTOR | 39K OHM 1/5W | CRD20TJ393T |
| AMP | R663 | | nsp | nsp | RESISTOR | 22K OHM 1/5W J | CRD20TJ223T |
| AMP | R664 | | nsp | nsp | RESISTOR | 22K OHM 1/5W J | CRD20TJ223T |
| AMP | R665 | | nsp | nsp | RESISTOR | 620 OHM 1/5W J | CRD20TJ621T |
| AMP | R666 | | nsp | nsp | RESISTOR | 620 OHM 1/5W J | CRD20TJ621T |
| AMP | R667 | | nsp | nsp | RESISTOR | 33K OHM 1/5W J | CRD20TJ333T |
| AMP | R668 | | nsp | nsp | RESISTOR | 33K OHM 1/5W J | CRD20TJ333T |
| AMP | R669 | | nsp | nsp | RESISTOR | 22K OHM 1/5W J | CRD20TJ223T |
| AMP | R670 | | nsp | nsp | RESISTOR | 22K OHM 1/5W J | CRD20TJ223T |
| AMP | R701 | | nsp | nsp | RESISTOR | 33K OHM 1/5W J | CRD20TJ333T |
| AMP | R703 | | nsp | nsp | RESISTOR | 1K OHM 1/5W J | CRD20TJ102T |
| AMP | R706 | | nsp | nsp | RESISTOR | 100 OHM 1/5W J | CRD20TJ101T |
| AMP | R707 | | nsp | nsp | RESISTOR | 10K OHM 1/5W J | CRD20TJ103T |
| AMP | R709 | | nsp | nsp | RESISTOR | 10K OHM 1/5W J | CRD20TJ103T |
| AMP | R711 | | nsp | nsp | RESISTOR | 470 OHM 1/5W J | CRD20TJ471T |
| AMP | R713 | | nsp | nsp | RESISTOR | 470 OHM 1/5W J | CRD20TJ471T |
| AMP | R715 | | nsp | nsp | RESISTOR | 68 OHM 1/5W J | CRD20TJ680T |
| AMP | R717 | | nsp | nsp | RESISTOR | 68 OHM 1/5W J | CRD20TJ680T |
| AMP | R719 | | 00MNB51514240 | 00MNB51514240 | KANON-RESISTER | LT24001/6S J | HRT16C1512400JT |
| AMP | R721 | | 00MNB51514240 | 00MNB51514240 | KANON-RESISTER | LT24001/6S J | HRT16C1512400JT |
| AMP | R723 | | nsp | nsp | RESISTOR | 330K OHM 1/5W | CRD20TJ334T |
| AMP | R725 | | nsp | nsp | RESISTOR | 330K OHM 1/5W | CRD20TJ334T |
| AMP | R727 | | nsp | nsp | RESISTOR | 100 OHM 1/5W J | CRD20TJ101T |
| AMP | R729 | | nsp | nsp | RESISTOR | 100 OHM 1/5W J | CRD20TJ101T |
| AMP | R731 | | nsp | nsp | RESISTOR | 10 OHM 1/4W | CRD25TJ100T |
| AMP | R733 | | nsp | nsp | RESISTOR | 10 OHM 1/4W | CRD25TJ100T |
| AMP | R735 | | nsp | nsp | RESISTOR | 27 OHM 1/5W J | CRD20TJ270T |
| AMP | R739 | | nsp | nsp | RESISTOR | 120 OHM 1W J | KRG1SANJ121RT |
| AMP | R741 | | nsp | nsp | RESISTOR | 120 OHM 1W J | KRG1SANJ121RT |
| AMP | R743 | | nsp | nsp | RESISTOR | 120 OHM 1W J | KRG1SANJ121RT |
| AMP | R745 | | nsp | nsp | RESISTOR | 47 OHM 1W J | KRG1SANJ470RT |
| AMP | R749 | | nsp | nsp | RESISTOR | 15 OHM 1/5W J | CRD20TJ150T |
| AMP | R751 | | nsp | nsp | RESISTOR | 10 OHM 1/5W J | CRD20TJ100T |
| AMP | R753 | | nsp | nsp | RESISTOR | 1K OHM 1/5W J | CRD20TJ102T |
| AMP | R755 | | nsp | nsp | RESISTOR | 1K OHM 1/5W J | CRD20TJ102T |
| AMP | R757 | | nsp | nsp | RESISTOR | 680 OHM 1/5W J | CRD20TJ681T |
| AMP | R759 | | nsp | nsp | RESISTOR | 39K OHM 1/5W | CRD20TJ393T |
| AMP | R761 | | nsp | nsp | RESISTOR | 39K OHM 1/5W | CRD20TJ393T |
| AMP | R763 | | nsp | nsp | RESISTOR | 22K OHM 1/5W J | CRD20TJ223T |
| AMP | R767 | | nsp | nsp | RESISTOR | 33K OHM 1/5W J | CRD20TJ333T |
| AMP | R770 | | nsp | nsp | RESISTOR | 22K OHM 1/5W J | CRD20TJ223T |
| AMP | R785 | | nsp | nsp | RESISTOR | 620 OHM 1/5W J | CRD20TJ621T |
| AMP | R801 | | nsp | nsp | RESISTOR | 68K OHM 1/5W J | CRD20TJ683T |
| AMP | R802 | | nsp | nsp | RESISTOR | 68K OHM 1/5W J | CRD20TJ683T |
| AMP | R803 | | nsp | nsp | RESISTOR | 68K OHM 1/5W J | CRD20TJ683T |
| AMP | R804 | | nsp | nsp | RESISTOR | 68K OHM 1/5W J | CRD20TJ683T |
| AMP | R805 | | nsp | nsp | RESISTOR | 68K OHM 1/5W J | CRD20TJ683T |
| AMP | R806 | | nsp | nsp | RESISTOR | 68K OHM 1/5W J | CRD20TJ683T |
| AMP | R807 | | nsp | nsp | RESISTOR | 68K OHM 1/5W J | CRD20TJ683T |
| AMP | R808 | | nsp | nsp | RESISTOR | 100K OHM 1/5W J | CRD20TJ104T |
| AMP | R809 | | nsp | nsp | RESISTOR | 22K OHM 1/5W J | CRD20TJ223T |
| AMP | R810 | | nsp | nsp | RESISTOR | 100K OHM 1/5W J | CRD20TJ104T |
| AMP | R811 | | nsp | nsp | RESISTOR | 3.3K OHM 1/5W J | CRD20TJ332T |
| AMP | R812 | | nsp | nsp | RESISTOR | 1K OHM 1/5W J | CRD20TJ102T |
| AMP | R813 | | nsp | nsp | RESISTOR | 33K OHM 1/5W J | CRD20TJ333T |
| AMP | R814 | | nsp | nsp | RESISTOR | 1K OHM 1/5W J | CRD20TJ102T |
| AMP | R815 | | nsp | nsp | RESISTOR | 3.3K OHM 1/5W J | CRD20TJ332T |
| AMP | R816 | | nsp | nsp | RESISTOR | 6.8K OHM 1/5W J | CRD20TJ682T |
| AMP | R817 | | nsp | nsp | RESISTOR | 22K OHM 1/5W J | CRD20TJ223T |

NOTE : “nsp” PARTS IS LISTED FOR REFERENCE ONLY, MARANTZ WILL NOT SUPPLY THESE PARTS.

| P.C.B. NAME | POS. NO. | VERS. COLOR | PART NO. (FOR EUR) | PART NO. (MJI) | PART NAME | DESCRIPTION | |
|---|---|---|---|---|---|---|---|
| AMP | R818 | | nsp | nsp | RESISTOR | 15K OHM 1/5W J | CRD20TJ153T |
| AMP | R819 | | nsp | nsp | RESISTOR | 33K OHM 1/5W J | CRD20TJ333T |
| AMP | R820 | | nsp | nsp | RESISTOR | 10K OHM 1/5W J | CRD20TJ103T |
| AMP | R821 | | nsp | nsp | RESISTOR | 4.7K OHM 1/5W J | CRD20TJ472T |
| AMP | R822 | | nsp | nsp | RESISTOR | 10K OHM 1/5W J | CRD20TJ103T |
| AMP | R823 | | nsp | nsp | RESISTOR | 10K OHM 1/5W J | CRD20TJ103T |
| AMP | VR41 | | 90M-RA001090R | 90M-RA001090R | TRIMMING RESIST | 220 OHM | HVN1RE221B01T |
| AMP | VR42 | | 90M-RA001090R | 90M-RA001090R | TRIMMING RESIST | 220 OHM | HVN1RE221B01T |
| AMP | VR51 | | 90M-RA001090R | 90M-RA001090R | TRIMMING RESIST | 220 OHM | HVN1RE221B01T |
| AMP | VR52 | | 90M-RA001090R | 90M-RA001090R | TRIMMING RESIST | 220 OHM | HVN1RE221B01T |
| AMP | VR61 | | 90M-RA001090R | 90M-RA001090R | TRIMMING RESIST | 220 OHM | HVN1RE221B01T |
| AMP | VR62 | | 90M-RA001090R | 90M-RA001090R | TRIMMING RESIST | 220 OHM | HVN1RE221B01T |
| AMP | VR71 | | 90M-RA001090R | 90M-RA001090R | TRIMMING RESIST | 220 OHM | HVN1RE221B01T |
| | | | | | **COMPONENT PCB (CUP11708Z)** | | |
| COMPO. | BK11 | | nsp | nsp | BRACKET | | CMD1A387 |
| COMPO. | BK12 | | nsp | nsp | BRACKET | | CMD1A387 |
| COMPO. | BN41 | | nsp | nsp | CONNECTIVE CORD | SR7400 | CWB1B906140EN |
| COMPO. | C901 | | nsp | 00MOA47602520 | ELECT CAP. | 47UF 25V | HCEA1EH470T |
| COMPO. | C902 | | nsp | 00MOA47602520 | ELECT CAP. | 47UF 25V | HCEA1EH470T |
| COMPO. | C903 | | nsp | 00MOA47602520 | ELECT CAP. | 47UF 25V | HCEA1EH470T |
| COMPO. | C904 | | nsp | 00MOA47602520 | ELECT CAP. | 47UF 25V | HCEA1EH470T |
| COMPO. | C905 | | nsp | 00MOA47602520 | ELECT CAP. | 47UF 25V | HCEA1EH470T |
| COMPO. | C906 | | nsp | 00MOA47602520 | ELECT CAP. | 47UF 25V | HCEA1EH470T |
| COMPO. | C907 | | nsp | nsp | CERAMIC CAP. | 0.01UF 50V Z | HCBS1H103ZFT |
| COMPO. | C908 | | nsp | 00MOA47602520 | ELECT CAP. | 47UF 25V | HCEA1EH470T |
| COMPO. | C909 | | nsp | 00MOA47602520 | ELECT CAP. | 47UF 25V | HCEA1EH470T |
| COMPO. | C910 | | nsp | nsp | CERAMIC CAP. | 0.01UF 50V Z | HCBS1H103ZFT |
| COMPO. | C911 | | nsp | 00MOA47602520 | ELECT CAP. | 47UF 25V | HCEA1EH470T |
| COMPO. | C912 | | nsp | nsp | CERAMIC CAP. | 0.01UF 50V Z | HCBS1H103ZFT |
| COMPO. | C913 | | nsp | 00MOA47602520 | ELECT CAP. | 47UF 25V | HCEA1EH470T |
| COMPO. | C914 | | nsp | nsp | CERAMIC CAP. | 0.01UF 50V Z | HCBS1H103ZFT |
| COMPO. | C937 | | nsp | 00MOA47701020 | ELECT CAP. | 470UF 10V | HCEA1AH471T |
| COMPO. | C938 | | nsp | nsp | CERAMIC CAP. | 0.01UF 50V Z | HCBS1H103ZFT |
| COMPO. | C939 | | nsp | 00MOA47701020 | ELECT CAP. | 470UF 10V | HCEA1AH471T |
| COMPO. | C940 | | nsp | nsp | CERAMIC CAP. | 0.01UF 50V Z | HCBS1H103ZFT |
| COMPO. | C941 | | nsp | 00MOA47701020 | ELECT CAP. | 470UF 10V | HCEA1AH471T |
| COMPO. | C942 | | nsp | nsp | CERAMIC CAP. | 0.01UF 50V Z | HCBS1H103ZFT |
| COMPO. | C943 | | nsp | nsp | CERAMIC CAP. | 0.01UF 50V Z | HCBS1H103ZFT |
| COMPO. | C945 | | nsp | nsp | CERAMIC CAP. | 0.01UF 50V Z | HCBS1H103ZFT |
| COMPO. | C946 | | nsp | nsp | CERAMIC CAP. | 0.01UF 50V Z | HCBS1H103ZFT |
| COMPO. | C947 | | nsp | 00MOA10701620 | ELECT CAP. | 100UF 16V | HCEA1CH101T |
| COMPO. | C950 | | nsp | nsp | CERAMIC CAP. | 0.01UF 50V Z | HCBS1H103ZFT |
| COMPO. | C951 | | nsp | 00MOA10605020 | ELECT CAP. | 10UF 50V | HCEA1HH100T |
| COMPO. | C952 | | nsp | 00MOA10605020 | ELECT CAP. | 10UF 50V | HCEA1HH100T |
| COMPO. | C953 | | nsp | 00MOA10605020 | ELECT CAP. | 10UF 50V | HCEA1HH100T |
| COMPO. | C954 | | nsp | nsp | CERAMIC CAP. | 0.01UF 50V Z | HCBS1H103ZFT |
| COMPO. | C955 | | nsp | 00MOA47602520 | ELECT CAP. | 47UF 25V | HCEA1EH470T |
| COMPO. | C956 | | nsp | 00MOA47602520 | ELECT CAP. | 47UF 25V | HCEA1EH470T |
| COMPO. | C957 | | nsp | 00MOA47602520 | ELECT CAP. | 47UF 25V | HCEA1EH470T |
| COMPO. | CN42 | | nsp | nsp | JACK | GF102-07S-TS | KJP07GA117ZG |
| COMPO. | IC91 | | 00MHC10230090 | 00MHC10230090 | IC | NJM2584D | HVINJM2584D |
| COMPO. | IC94 | | 90M-HC108960R | 90M-HC108960R | IC | NJM2586L | HVINJM2586L |
| COMPO. | J901 | | nsp | nsp | CONNECTIVE CORD | SN95/PB5 , 0.6 | C3A206 |
| COMPO. | J902 | | nsp | nsp | CONNECTIVE CORD | SN95/PB5 , 0.6 | C3A206 |
| COMPO. | J903 | | nsp | nsp | CONNECTIVE CORD | SN95/PB5 , 0.6 | C3A206 |
| COMPO. | J904 | | nsp | nsp | CONNECTIVE CORD | SN95/PB5 , 0.6 | C3A206 |
| COMPO. | J905 | | nsp | nsp | CONNECTIVE CORD | SN95/PB5 , 0.6 | C3A206 |
| COMPO. | J906 | | nsp | nsp | CONNECTIVE CORD | SN95/PB5 , 0.6 | C3A206 |
| COMPO. | J908 | | nsp | nsp | CONNECTIVE CORD | SN95/PB5 , 0.6 | C3A206 |
| COMPO. | J909 | | nsp | nsp | CONNECTIVE CORD | SN95/PB5 , 0.6 | C3A206 |
| COMPO. | J910 | | nsp | nsp | CONNECTIVE CORD | SN95/PB5 , 0.6 | C3A206 |
| COMPO. | J911 | | nsp | nsp | CONNECTIVE CORD | SN95/PB5 , 0.6 | C3A206 |
| COMPO. | J912 | | nsp | nsp | CONNECTIVE CORD | SN95/PB5 , 0.6 | C3A206 |
| COMPO. | J913 | | nsp | nsp | CONNECTIVE CORD | SN95/PB5 , 0.6 | C3A206 |
| COMPO. | J914 | | nsp | nsp | CONNECTIVE CORD | SN95/PB5 , 0.6 | C3A206 |
| COMPO. | J915 | | nsp | nsp | CONNECTIVE CORD | SN95/PB5 , 0.6 | C3A206 |
| COMPO. | J916 | | nsp | nsp | CONNECTIVE CORD | SN95/PB5 , 0.6 | C3A206 |
| COMPO. | J917 | | nsp | nsp | CONNECTIVE CORD | SN95/PB5 , 0.6 | C3A206 |

NOTE : “nsp” PARTS IS LISTED FOR REFERENCE ONLY, MARANTZ WILL NOT SUPPLY THESE PARTS.

| P.C.B. NAME | POS. NO. | VERS. COLOR | PART NO. (FOR EUR) | PART NO. (MJI) | PART NAME | DESCRIPTION | |
|---|---|---|---|---|---|---|---|
| COMPO. | J918 | | nsp | nsp | CONNECTIVE CORD | SN95/PB5 , 0.6 | C3A206 |
| COMPO. | J919 | | nsp | nsp | CONNECTIVE CORD | SN95/PB5 , 0.6 | C3A206 |
| COMPO. | J920 | | nsp | nsp | CONNECTIVE CORD | SN95/PB5 , 0.6 | C3A206 |
| COMPO. | J921 | | nsp | nsp | CONNECTIVE CORD | SN95/PB5 , 0.6 | C3A206 |
| COMPO. | J922 | | nsp | nsp | CONNECTIVE CORD | SN95/PB5 , 0.6 | C3A206 |
| COMPO. | JK91 | | 90M-YT003210R | 90M-YT003210R | TERMINAL | 3P,G/B/R,SILVER | CJJ4S030Z |
| COMPO. | JK92 | | 90M-YT003210R | 90M-YT003210R | TERMINAL | 3P,G/B/R,SILVER | CJJ4S030Z |
| COMPO. | JK95 | | 90M-YT003210R | 90M-YT003210R | TERMINAL | 3P,G/B/R,SILVER | CJJ4S030Z |
| COMPO. | Q901 | | 00MHT30001000 | 00MHT30001000 | TRANSISTOR | | HVTKTC3199YT |
| COMPO. | Q902 | | 90M-HT600040R | 90M-HT600040R | TRANSISTOR | | HVTKTA1267YT |
| COMPO. | R901 | | nsp | nsp | RESISTOR | 75 OHM 1/5W J | CRD20TJ750T |
| COMPO. | R902 | | nsp | nsp | RESISTOR | 75 OHM 1/5W J | CRD20TJ750T |
| COMPO. | R903 | | nsp | nsp | RESISTOR | 75 OHM 1/5W J | CRD20TJ750T |
| COMPO. | R904 | | nsp | nsp | RESISTOR | 1M OHM 1/5W J | CRD20TJ105T |
| COMPO. | R905 | | nsp | nsp | RESISTOR | 1M OHM 1/5W J | CRD20TJ105T |
| COMPO. | R906 | | nsp | nsp | RESISTOR | 75 OHM 1/5W J | CRD20TJ750T |
| COMPO. | R907 | | nsp | nsp | RESISTOR | 75 OHM 1/5W J | CRD20TJ750T |
| COMPO. | R908 | | nsp | nsp | RESISTOR | 75 OHM 1/5W J | CRD20TJ750T |
| COMPO. | R931 | | nsp | nsp | RESISTOR | 75 OHM 1/5W J | CRD20TJ750T |
| COMPO. | R932 | | nsp | nsp | RESISTOR | 75 OHM 1/5W J | CRD20TJ750T |
| COMPO. | R933 | | nsp | nsp | RESISTOR | 75 OHM 1/5W J | CRD20TJ750T |
| COMPO. | R934 | | nsp | nsp | RESISTOR | 1M OHM 1/5W J | CRD20TJ105T |
| COMPO. | R935 | | nsp | nsp | RESISTOR | 1M OHM 1/5W J | CRD20TJ105T |
| COMPO. | R936 | | nsp | nsp | RESISTOR | 1M OHM 1/5W J | CRD20TJ105T |
| COMPO. | R941 | | nsp | nsp | RESISTOR | 12K OHM 1/5W J | CRD20TJ123T |
| COMPO. | R942 | | nsp | nsp | RESISTOR | 10K OHM 1/5W J | CRD20TJ103T |
| COMPO. | R943 | | nsp | nsp | RESISTOR | 470 OHM 1/5W J | CRD20TJ471T |
| COMPO. | R945 | | nsp | nsp | RESISTOR | 470 OHM 1/5W J | CRD20TJ471T |
| COMPO. | R946 | | nsp | nsp | RESISTOR | 470 OHM 1/5W J | CRD20TJ471T |
| COMPO. | R947 | | nsp | nsp | RESISTOR | 10K OHM 1/5W J | CRD20TJ103T |
| COMPO. | R951 | | nsp | nsp | CONNECTIVE CORD | SN95/PB5 , 0.6 | C3A206 |
| | | | | | **DSP PCB (CUP11706Z)** | | |
| DSP | BC11 | | nsp | nsp | CONNECTIVE CORD | SN95/PB5 , 0.6 | C3A206 |
| DSP | BC12 | | nsp | nsp | CONNECTIVE CORD | SN95/PB5 , 0.6 | C3A206 |
| DSP | BN33 | | nsp | nsp | JACK | MOLEX53014-0710 | KJP07GA19ZM |
| DSP | C101 | | nsp | 00MOA47601640 | ELECT CAP. | 47UF 16V | HCEA1CH470T |
| DSP | C102 | | nsp | 00MDK96103300 | CERAMIC CAP. | 0.01UF 50V | HCUS1H103KC |
| DSP | C103 | | nsp | 00MOA47601640 | ELECT CAP. | 47UF 16V | HCEA1CH470T |
| DSP | C104 | | nsp | 00MDK96103300 | CERAMIC CAP. | 0.01UF 50V | HCUS1H103KC |
| DSP | C105 | | nsp | 00MOA22605020 | ELECT CAP. | 22UF 25V | HCEA1EH220T |
| DSP | C106 | | nsp | 00MDK96104300 | CERAMIC CAP. | 0.1UF ZF1608 SIZE | HCUS1E104ZF |
| DSP | C107 | | nsp | 00MDD95101300 | CERAMIC CAP. | 100PF 50V J | HCUS1H101JA |
| DSP | C108 | | nsp | 00MDK96104300 | CERAMIC CAP. | 0.1UF ZF1608 SIZE | HCUS1E104ZF |
| DSP | C109 | | nsp | 00MDD95101300 | CERAMIC CAP. | 100PF 50V J | HCUS1H101JA |
| DSP | C110 | | nsp | 00MDK96104300 | CERAMIC CAP. | 0.1UF ZF1608 SIZE | HCUS1E104ZF |
| DSP | C111 | | nsp | 00MOA22605020 | ELECT CAP. | 22UF 25V | HCEA1EH220T |
| DSP | C112 | | nsp | 00MDK96104300 | CERAMIC CAP. | 0.1UF ZF1608 SIZE | HCUS1E104ZF |
| DSP | C113 | | nsp | 00MDD95330300 | CERAMIC CAP. | 33PF 50V | HCUS1H330JA |
| DSP | C114 | | nsp | 00MDK96104300 | CERAMIC CAP. | 0.1UF ZF1608 SIZE | HCUS1E104ZF |
| DSP | C115 | | nsp | 00MDK96104300 | CERAMIC CAP. | 0.1UF ZF1608 SIZE | HCUS1E104ZF |
| DSP | C116 | | nsp | 00MDD95330300 | CERAMIC CAP. | 33PF 50V | HCUS1H330JA |
| DSP | C117 | | nsp | 00MDK96103300 | CERAMIC CAP. | 0.01UF 50V | HCUS1H103KC |
| DSP | C118 | | nsp | 00MOA47601640 | ELECT CAP. | 47UF 16V | HCEA1CH470T |
| DSP | C119 | | nsp | 00MDK96104300 | CERAMIC CAP. | 0.1UF ZF1608 SIZE | HCUS1E104ZF |
| DSP | C120 | | nsp | 00MDK96104300 | CERAMIC CAP. | 0.1UF ZF1608 SIZE | HCUS1E104ZF |
| DSP | C121 | | nsp | 00MDK96104300 | CERAMIC CAP. | 0.1UF ZF1608 SIZE | HCUS1E104ZF |
| DSP | C122 | | nsp | 00MOA22605020 | ELECT CAP. | 22UF 25V | HCEA1EH220T |
| DSP | C123 | | nsp | 00MDK96104300 | CERAMIC CAP. | 0.1UF ZF1608 SIZE | HCUS1E104ZF |
| DSP | C124 | | nsp | 00MDK96104300 | CERAMIC CAP. | 0.1UF ZF1608 SIZE | HCUS1E104ZF |
| DSP | C125 | | nsp | 00MDK98223300 | CERAMIC CAP. | 0.022UF 50V | HCUS1H223KC |
| DSP | C126 | | nsp | 00MDK96104300 | CERAMIC CAP. | 0.1UF ZF1608 SIZE | HCUS1E104ZF |
| DSP | C127 | | nsp | 00MOA22605020 | ELECT CAP. | 22UF 25V | HCEA1EH220T |
| DSP | C128 | | nsp | 00MDK96104300 | CERAMIC CAP. | 0.1UF ZF1608 SIZE | HCUS1E104ZF |
| DSP | C129 | | nsp | 00MOA22605020 | ELECT CAP. | 22UF 25V | HCEA1EH220T |
| DSP | C130 | | nsp | 00MDK96104300 | CERAMIC CAP. | 0.1UF ZF1608 SIZE | HCUS1E104ZF |
| DSP | C131 | | nsp | 00MOA22605020 | ELECT CAP. | 22UF 25V | HCEA1EH220T |
| DSP | C132 | | nsp | 00MDD95330300 | CERAMIC CAP. | 33PF 50V | HCUS1H330JA |
| DSP | C133 | | nsp | 00MDD95330300 | CERAMIC CAP. | 33PF 50V | HCUS1H330JA |

NOTE : “nsp” PARTS IS LISTED FOR REFERENCE ONLY, MARANTZ WILL NOT SUPPLY THESE PARTS.

| P.C.B. NAME | POS. NO. | VERS. COLOR | PART NO. (FOR EUR) | PART NO. (MJI) | PART NAME | DESCRIPTION | |
|---|---|---|---|---|---|---|---|
| DSP | C134 | | nsp | 00MDK96104300 | CERAMIC CAP. | 0.1UF ZF1608 SIZE | HCUS1E104ZF |
| DSP | C135 | | nsp | 00MDD95101300 | CERAMIC CAP. | 100PF 50V J | HCUS1H101JA |
| DSP | C136 | | nsp | 00MDK96104300 | CERAMIC CAP. | 0.1UF ZF1608 SIZE | HCUS1E104ZF |
| DSP | C137 | | nsp | 00MOA22605020 | ELECT CAP. | 22UF 25V | HCEA1EH220T |
| DSP | C138 | | nsp | 00MOA22605020 | ELECT CAP. | 22UF 25V | HCEA1EH220T |
| DSP | C139 | | nsp | 00MOA22605020 | ELECT CAP. | 22UF 25V | HCEA1EH220T |
| DSP | C140 | | nsp | 00MDD95471300 | CERAMIC CAP. | 470PF 50V | HCUS1H471JA |
| DSP | C141 | | nsp | 00MDD95101300 | CERAMIC CAP. | 100PF 50V J | HCUS1H101JA |
| DSP | C142 | | nsp | 00MDD95151300 | CERAMIC CAP. | 150PF JA 1608 SIZE | HCUS1H151JA |
| DSP | C143 | | nsp | 00MDK96104300 | CERAMIC CAP. | 0.1UF ZF1608 SIZE | HCUS1E104ZF |
| DSP | C144 | | nsp | 00MDK96272300 | CERAMIC CAP. | 2700PF 50V | HCUS1H272KC |
| DSP | C145 | | nsp | 00MOA22605020 | ELECT CAP. | 22UF 25V | HCEA1EH220T |
| DSP | C146 | | nsp | 00MOA22605020 | ELECT CAP. | 22UF 25V | HCEA1EH220T |
| DSP | C148 | | nsp | 00MDD95101300 | CERAMIC CAP. | 100PF 50V J | HCUS1H101JA |
| DSP | C149 | | nsp | 00MDD95151300 | CERAMIC CAP. | 150PF JA 1608 SIZE | HCUS1H151JA |
| DSP | C150 | | nsp | 00MDK96104300 | CERAMIC CAP. | 0.1UF ZF1608 SIZE | HCUS1E104ZF |
| DSP | C151 | | nsp | 00MDK96272300 | CERAMIC CAP. | 2700PF 50V | HCUS1H272KC |
| DSP | C152 | | nsp | 00MOA10701620 | ELECT CAP. | 100UF 16V | HCEA1CH101T |
| DSP | C153 | | nsp | 00MDK96104300 | CERAMIC CAP. | 0.1UF ZF1608 SIZE | HCUS1E104ZF |
| DSP | C154 | | nsp | 00MDD95101300 | CERAMIC CAP. | 100PF 50V J | HCUS1H101JA |
| DSP | C155 | | nsp | 00MOA47601640 | ELECT CAP. | 47UF 16V | HCEA1CH470T |
| DSP | C156 | | nsp | 00MOA47601640 | ELECT CAP. | 47UF 16V | HCEA1CH470T |
| DSP | C157 | | nsp | 00MDK96104300 | CERAMIC CAP. | 0.1UF ZF1608 SIZE | HCUS1E104ZF |
| DSP | C158 | | nsp | 00MOA22605020 | ELECT CAP. | 22UF 25V | HCEA1EH220T |
| DSP | C159 | | nsp | 00MDK96104300 | CERAMIC CAP. | 0.1UF ZF1608 SIZE | HCUS1E104ZF |
| DSP | C160 | | nsp | 00MOA22605020 | ELECT CAP. | 22UF 25V | HCEA1EH220T |
| DSP | C161 | | nsp | 00MDK96104300 | CERAMIC CAP. | 0.1UF ZF1608 SIZE | HCUS1E104ZF |
| DSP | C162 | | nsp | 00MOA22605020 | ELECT CAP. | 22UF 25V | HCEA1EH220T |
| DSP | C163 | | nsp | 00MDK96104300 | CERAMIC CAP. | 0.1UF ZF1608 SIZE | HCUS1E104ZF |
| DSP | C164 | | nsp | 00MDK96104300 | CERAMIC CAP. | 0.1UF ZF1608 SIZE | HCUS1E104ZF |
| DSP | C165 | | nsp | 00MOA22605020 | ELECT CAP. | 22UF 25V | HCEA1EH220T |
| DSP | C166 | | nsp | 00MDK96104300 | CERAMIC CAP. | 0.1UF ZF1608 SIZE | HCUS1E104ZF |
| DSP | C167 | | nsp | 00MOA22505020 | ELECT CAP. | 2.2UF 50V | HCEA1HH2R2T |
| DSP | C168 | | nsp | 00MDD95680300 | CERAMIC CAP. | 68PF 50V | HCUS1H680JA |
| DSP | C169 | | nsp | 00MDK96122300 | CERAMIC CAP. | 1200PF 50V | HCUS1H122KC |
| DSP | C170 | | nsp | 00MDK96103300 | CERAMIC CAP. | 0.01UF 50V | HCUS1H103KC |
| DSP | C171 | | nsp | 00MDK98105200 | CERAMIC CAP. | 1UF | HCUS1C105ZF |
| DSP | C172 | | nsp | 00MOA47601640 | ELECT CAP. | 47UF 16V | HCEA1CH470T |
| DSP | C173 | | nsp | 00MDK96104300 | CERAMIC CAP. | 0.1UF ZF1608 SIZE | HCUS1E104ZF |
| DSP | C174 | | nsp | 00MDK96104300 | CERAMIC CAP. | 0.1UF ZF1608 SIZE | HCUS1E104ZF |
| DSP | C175 | | nsp | 00MOA22605020 | ELECT CAP. | 22UF 25V | HCEA1EH220T |
| DSP | C176 | | nsp | 00MDK96104300 | CERAMIC CAP. | 0.1UF ZF1608 SIZE | HCUS1E104ZF |
| DSP | C177 | | nsp | 00MDK96104300 | CERAMIC CAP. | 0.1UF ZF1608 SIZE | HCUS1E104ZF |
| DSP | C178 | | nsp | 00MDK96104300 | CERAMIC CAP. | 0.1UF ZF1608 SIZE | HCUS1E104ZF |
| DSP | C179 | | nsp | 00MOA22605020 | ELECT CAP. | 22UF 25V | HCEA1EH220T |
| DSP | C180 | | nsp | 00MDK96104300 | CERAMIC CAP. | 0.1UF ZF1608 SIZE | HCUS1E104ZF |
| DSP | C181 | | nsp | 00MOA22605020 | ELECT CAP. | 22UF 25V | HCEA1EH220T |
| DSP | C182 | | nsp | 00MDK96104300 | CERAMIC CAP. | 0.1UF ZF1608 SIZE | HCUS1E104ZF |
| DSP | C183 | | nsp | 00MDK96104300 | CERAMIC CAP. | 0.1UF ZF1608 SIZE | HCUS1E104ZF |
| DSP | C184 | | nsp | 00MDK96104300 | CERAMIC CAP. | 0.1UF ZF1608 SIZE | HCUS1E104ZF |
| DSP | C185 | | nsp | 00MOA22605020 | ELECT CAP. | 22UF 25V | HCEA1EH220T |
| DSP | C186 | | nsp | 00MDK96104300 | CERAMIC CAP. | 0.1UF ZF1608 SIZE | HCUS1E104ZF |
| DSP | C187 | | nsp | 00MOA22605020 | ELECT CAP. | 22UF 25V | HCEA1EH220T |
| DSP | C188 | | nsp | 00MDK96104300 | CERAMIC CAP. | 0.1UF ZF1608 SIZE | HCUS1E104ZF |
| DSP | C189 | | nsp | 00MDK96104300 | CERAMIC CAP. | 0.1UF ZF1608 SIZE | HCUS1E104ZF |
| DSP | C190 | | nsp | 00MDK96104300 | CERAMIC CAP. | 0.1UF ZF1608 SIZE | HCUS1E104ZF |
| DSP | C191 | | nsp | 00MDK96104300 | CERAMIC CAP. | 0.1UF ZF1608 SIZE | HCUS1E104ZF |
| DSP | C192 | | nsp | 00MDK96104300 | CERAMIC CAP. | 0.1UF ZF1608 SIZE | HCUS1E104ZF |
| DSP | C193 | | nsp | 00MOA22605020 | ELECT CAP. | 22UF 25V | HCEA1EH220T |
| DSP | C194 | | nsp | 00MDK96104300 | CERAMIC CAP. | 0.1UF ZF1608 SIZE | HCUS1E104ZF |
| DSP | C195 | | nsp | 00MOA22605020 | ELECT CAP. | 22UF 25V | HCEA1EH220T |
| DSP | C197 | | nsp | 00MDK96104300 | CERAMIC CAP. | 0.1UF ZF1608 SIZE | HCUS1E104ZF |
| DSP | C198 | | nsp | 00MOA10505020 | ELECT CAP. | 1UF 50V | HCEA1HH1R0T |
| DSP | C199 | | nsp | 00MDK96104300 | CERAMIC CAP. | 0.1UF ZF1608 SIZE | HCUS1E104ZF |
| DSP | C200 | | nsp | 00MOA47601640 | ELECT CAP. | 47UF 16V | HCEA1CH470T |
| DSP | C201 | | nsp | 00MDK96104300 | CERAMIC CAP. | 0.1UF ZF1608 SIZE | HCUS1E104ZF |
| DSP | C202 | | nsp | 00MOA10701620 | ELECT CAP. | 100UF 16V | HCEA1CH101T |
| DSP | C205 | | nsp | 00MDK96332300 | CERAMIC CAP. | 3300PF 50V | HCUS1H332KC |

NOTE : “nsp” PARTS IS LISTED FOR REFERENCE ONLY, MARANTZ WILL NOT SUPPLY THESE PARTS.

| P.C.B. NAME | POS. NO. | VERS. COLOR | PART NO. (FOR EUR) | PART NO. (MJI) | PART NAME | DESCRIPTION | |
|---|---|---|---|---|---|---|---|
| DSP | C206 | | nsp | 00MDD95471300 | CERAMIC CAP. | 470PF 50V | HCUS1H471JA |
| DSP | C207 | | nsp | 00MDK96332300 | CERAMIC CAP. | 3300PF 50V | HCUS1H332KC |
| DSP | C208 | | nsp | 00MDD95471300 | CERAMIC CAP. | 470PF 50V | HCUS1H471JA |
| DSP | C209 | | nsp | 00MDK96104300 | CERAMIC CAP. | 0.1UF ZF1608 SIZE | HCUS1E104ZF |
| DSP | C210 | | nsp | 00MOA22605020 | ELECT CAP. | 22UF 25V | HCEA1EH220T |
| DSP | C211 | | nsp | 00MDK96102300 | CERAMIC CAP. | 1000PF 50V | HCUS1H102KC |
| DSP | C212 | | nsp | 00MDK96332300 | CERAMIC CAP. | 3300PF 50V | HCUS1H332KC |
| DSP | C213 | | nsp | 00MDD95471300 | CERAMIC CAP. | 470PF 50V | HCUS1H471JA |
| DSP | C214 | | nsp | 00MDK96332300 | CERAMIC CAP. | 3300PF 50V | HCUS1H332KC |
| DSP | C215 | | nsp | 00MDD95471300 | CERAMIC CAP. | 470PF 50V | HCUS1H471JA |
| DSP | C216 | | nsp | 00MDK96104300 | CERAMIC CAP. | 0.1UF ZF1608 SIZE | HCUS1E104ZF |
| DSP | C217 | | nsp | 00MOA22605020 | ELECT CAP. | 22UF 25V | HCEA1EH220T |
| DSP | C218 | | nsp | 00MDK96102300 | CERAMIC CAP. | 1000PF 50V | HCUS1H102KC |
| DSP | C219 | | nsp | 00MDK96332300 | CERAMIC CAP. | 3300PF 50V | HCUS1H332KC |
| DSP | C220 | | nsp | 00MDD95471300 | CERAMIC CAP. | 470PF 50V | HCUS1H471JA |
| DSP | C221 | | nsp | 00MDK96332300 | CERAMIC CAP. | 3300PF 50V | HCUS1H332KC |
| DSP | C222 | | nsp | 00MDD95471300 | CERAMIC CAP. | 470PF 50V | HCUS1H471JA |
| DSP | C223 | | nsp | 00MDK96104300 | CERAMIC CAP. | 0.1UF ZF1608 SIZE | HCUS1E104ZF |
| DSP | C224 | | nsp | 00MOA22605020 | ELECT CAP. | 22UF 25V | HCEA1EH220T |
| DSP | C225 | | nsp | 00MDK96102300 | CERAMIC CAP. | 1000PF 50V | HCUS1H102KC |
| DSP | C226 | | nsp | 00MDK96332300 | CERAMIC CAP. | 3300PF 50V | HCUS1H332KC |
| DSP | C227 | | nsp | 00MDD95471300 | CERAMIC CAP. | 470PF 50V | HCUS1H471JA |
| DSP | C228 | | nsp | 00MDK96332300 | CERAMIC CAP. | 3300PF 50V | HCUS1H332KC |
| DSP | C229 | | nsp | 00MDD95471300 | CERAMIC CAP. | 470PF 50V | HCUS1H471JA |
| DSP | C230 | | nsp | 00MDK96104300 | CERAMIC CAP. | 0.1UF ZF1608 SIZE | HCUS1E104ZF |
| DSP | C231 | | nsp | 00MOA22605020 | ELECT CAP. | 22UF 25V | HCEA1EH220T |
| DSP | C232 | | nsp | 00MDK96102300 | CERAMIC CAP. | 1000PF 50V | HCUS1H102KC |
| DSP | C233 | | nsp | 00MDK96332300 | CERAMIC CAP. | 3300PF 50V | HCUS1H332KC |
| DSP | C234 | | nsp | 00MDD95471300 | CERAMIC CAP. | 470PF 50V | HCUS1H471JA |
| DSP | C235 | | nsp | 00MDK96332300 | CERAMIC CAP. | 3300PF 50V | HCUS1H332KC |
| DSP | C236 | | nsp | 00MDD95471300 | CERAMIC CAP. | 470PF 50V | HCUS1H471JA |
| DSP | C237 | | nsp | 00MDK96104300 | CERAMIC CAP. | 0.1UF ZF1608 SIZE | HCUS1E104ZF |
| DSP | C238 | | nsp | 00MOA22605020 | ELECT CAP. | 22UF 25V | HCEA1EH220T |
| DSP | C239 | | nsp | 00MDK96102300 | CERAMIC CAP. | 1000PF 50V | HCUS1H102KC |
| DSP | C241 | | nsp | 00MDK96332300 | CERAMIC CAP. | 3300PF 50V | HCUS1H332KC |
| DSP | C242 | | nsp | 00MDD95471300 | CERAMIC CAP. | 470PF 50V | HCUS1H471JA |
| DSP | C243 | | nsp | 00MDK96332300 | CERAMIC CAP. | 3300PF 50V | HCUS1H332KC |
| DSP | C244 | | nsp | 00MDD95471300 | CERAMIC CAP. | 470PF 50V | HCUS1H471JA |
| DSP | C245 | | nsp | 00MDK96104300 | CERAMIC CAP. | 0.1UF ZF1608 SIZE | HCUS1E104ZF |
| DSP | C246 | | nsp | 00MOA22605020 | ELECT CAP. | 22UF 25V | HCEA1EH220T |
| DSP | C247 | | nsp | 00MDK96102300 | CERAMIC CAP. | 1000PF 50V | HCUS1H102KC |
| DSP | C248 | | nsp | 00MDK96332300 | CERAMIC CAP. | 3300PF 50V | HCUS1H332KC |
| DSP | C249 | | nsp | 00MDD95471300 | CERAMIC CAP. | 470PF 50V | HCUS1H471JA |
| DSP | C250 | | nsp | 00MDK96332300 | CERAMIC CAP. | 3300PF 50V | HCUS1H332KC |
| DSP | C251 | | nsp | 00MDD95471300 | CERAMIC CAP. | 470PF 50V | HCUS1H471JA |
| DSP | C252 | | nsp | 00MDK96104300 | CERAMIC CAP. | 0.1UF ZF1608 SIZE | HCUS1E104ZF |
| DSP | C253 | | nsp | 00MOA22605020 | ELECT CAP. | 22UF 25V | HCEA1EH220T |
| DSP | C254 | | nsp | 00MDK96102300 | CERAMIC CAP. | 1000PF 50V | HCUS1H102KC |
| DSP | C255 | | nsp | 00MDK96103300 | CERAMIC CAP. | 0.01UF 50V | HCUS1H103KC |
| DSP | C256 | | nsp | 00MDK96103300 | CERAMIC CAP. | 0.01UF 50V | HCUS1H103KC |
| DSP | C257 | | nsp | 00MDD95330300 | CERAMIC CAP. | 33PF 50V | HCUS1H330JA |
| DSP | C258 | | nsp | 00MDK96103300 | CERAMIC CAP. | 0.01UF 50V | HCUS1H103KC |
| DSP | C259 | | nsp | 00MDK96103300 | CERAMIC CAP. | 0.01UF 50V | HCUS1H103KC |
| DSP | C260 | | nsp | 00MDK96103300 | CERAMIC CAP. | 0.01UF 50V | HCUS1H103KC |
| DSP | C261 | | nsp | 00MDK96103300 | CERAMIC CAP. | 0.01UF 50V | HCUS1H103KC |
| DSP | C268 | | nsp | 00MDK96332300 | CERAMIC CAP. | 3300PF 50V | HCUS1H332KC |
| DSP | C269 | | nsp | 00MDD95471300 | CERAMIC CAP. | 470PF 50V | HCUS1H471JA |
| DSP | C270 | | nsp | 00MDK96332300 | CERAMIC CAP. | 3300PF 50V | HCUS1H332KC |
| DSP | C271 | | nsp | 00MDD95471300 | CERAMIC CAP. | 470PF 50V | HCUS1H471JA |
| DSP | C272 | | nsp | 00MDK96104300 | CERAMIC CAP. | 0.1UF ZF1608 SIZE | HCUS1E104ZF |
| DSP | C273 | | nsp | 00MOA22605020 | ELECT CAP. | 22UF 25V | HCEA1EH220T |
| DSP | C274 | | nsp | 00MDK96102300 | CERAMIC CAP. | 1000PF 50V | HCUS1H102KC |
| DSP | C282 | | nsp | 00MDK96104300 | CERAMIC CAP. | 0.1UF ZF1608 SIZE | HCUS1E104ZF |
| DSP | C283 | | nsp | 00MDK96104300 | CERAMIC CAP. | 0.1UF ZF1608 SIZE | HCUS1E104ZF |
| DSP | C284 | | nsp | 00MDK96104300 | CERAMIC CAP. | 0.1UF ZF1608 SIZE | HCUS1E104ZF |
| DSP | C285 | | nsp | 00MDK96104300 | CERAMIC CAP. | 0.1UF ZF1608 SIZE | HCUS1E104ZF |
| DSP | C286 | | nsp | 00MDK96104300 | CERAMIC CAP. | 0.1UF ZF1608 SIZE | HCUS1E104ZF |
| DSP | C287 | | nsp | 00MDK96104300 | CERAMIC CAP. | 0.1UF ZF1608 SIZE | HCUS1E104ZF |

NOTE : “nsp” PARTS IS LISTED FOR REFERENCE ONLY, MARANTZ WILL NOT SUPPLY THESE PARTS.

| P.C.B. NAME | POS. NO. | VERS. COLOR | PART NO. (FOR EUR) | PART NO. (MJI) | PART NAME | DESCRIPTION | |
|---|---|---|---|---|---|---|---|
| DSP | C289 | | nsp | 00MDK96104300 | CERAMIC CAP. | 0.1UF ZF1608 SIZE | HCUS1E104ZF |
| DSP | C290 | | nsp | 00MDK96104300 | CERAMIC CAP. | 0.1UF ZF1608 SIZE | HCUS1E104ZF |
| DSP | C291 | | nsp | 00MDK96104300 | CERAMIC CAP. | 0.1UF ZF1608 SIZE | HCUS1E104ZF |
| DSP | C292 | | nsp | 00MDK96104300 | CERAMIC CAP. | 0.1UF ZF1608 SIZE | HCUS1E104ZF |
| DSP | C293 | | nsp | 00MDK96104300 | CERAMIC CAP. | 0.1UF ZF1608 SIZE | HCUS1E104ZF |
| DSP | C294 | | nsp | 00MOA47601640 | ELECT CAP. | 47UF 16V | HCEA1CH470T |
| DSP | C299 | /L1G | nsp | 00MDK96104300 | CERAMIC CAP. | 0.1UF ZF1608 SIZE | HCUS1E104ZF |
| DSP | C299 | /N1B | nsp | 00MDK96104300 | CERAMIC CAP. | 0.1UF 50V | HCUS1H104ZF |
| DSP | C299 | /N1G | nsp | 00MDK96104300 | CERAMIC CAP. | 0.1UF 50V | HCUS1H104ZF |
| DSP | C299 | /N1S | nsp | 00MDK96104300 | CERAMIC CAP. | 0.1UF 50V | HCUS1H104ZF |
| DSP | C299 | /U1B | nsp | 00MDK96104300 | CERAMIC CAP. | 0.1UF ZF1608 SIZE | HCUS1E104ZF |
| DSP | C302 | /L1G | nsp | 00MDD95330300 | CERAMIC CAP. | 33PF 50V | HCUS1H330JA |
| DSP | CC11 | | nsp | 00MDK96104300 | CERAMIC CAP. | 0.1UF ZF1608 SIZE | HCUS1E104ZF |
| DSP | CC12 | | nsp | 00MOA22605020 | ELECT CAP. | 22UF 25V | HCEA1EH220T |
| DSP | CC13 | | nsp | 00MDK96104300 | CERAMIC CAP. | 0.1UF ZF1608 SIZE | HCUS1E104ZF |
| DSP | CC14 | /L1G | nsp | 00MDD95180300 | CERAMIC CAP. | 18PF/1608 | HCUS1H180JC |
| DSP | CC14 | /N1B | nsp | 00MDD91100300 | CERAMIC CAP. | 10PF 50V J | HCUS1H100JA |
| DSP | CC14 | /N1G | nsp | 00MDD91100300 | CERAMIC CAP. | 10PF 50V J | HCUS1H100JA |
| DSP | CC14 | /N1S | nsp | 00MDD91100300 | CERAMIC CAP. | 10PF 50V J | HCUS1H100JA |
| DSP | CC14 | /U1B | nsp | 00MDD91100300 | CERAMIC CAP. | 10PF 50V J | HCUS1H100JA |
| DSP | CC15 | | nsp | 00MDK96104300 | CERAMIC CAP. | 0.1UF ZF1608 SIZE | HCUS1E104ZF |
| DSP | CC16 | | nsp | 00MDK96104300 | CERAMIC CAP. | 0.1UF ZF1608 SIZE | HCUS1E104ZF |
| DSP | CC17 | | nsp | 00MOA22605020 | ELECT CAP. | 22UF 25V | HCEA1EH220T |
| DSP | CC18 | | nsp | 00MDK96104300 | CERAMIC CAP. | 0.1UF ZF1608 SIZE | HCUS1E104ZF |
| DSP | CC19 | | nsp | 00MDK98474200 | CERAMIC CAP. | 0.47UF | HCUS1C474ZF |
| DSP | CC20 | | nsp | 00MOA22605020 | ELECT CAP. | 22UF 25V | HCEA1EH220T |
| DSP | CC21 | | nsp | 00MDK96104300 | CERAMIC CAP. | 0.1UF ZF1608 SIZE | HCUS1E104ZF |
| DSP | CC22 | | nsp | 00MDK96104300 | CERAMIC CAP. | 0.1UF ZF1608 SIZE | HCUS1E104ZF |
| DSP | CC23 | | nsp | 00MDD95220300 | CERAMIC CAP. | 22PF 50V | HCUS1H220JA |
| DSP | CC24 | | nsp | 00MDD95220300 | CERAMIC CAP. | 22PF 50V | HCUS1H220JA |
| DSP | CC25 | | nsp | 00MDK96104300 | CERAMIC CAP. | 0.1UF ZF1608 SIZE | HCUS1E104ZF |
| DSP | CC26 | | nsp | 00MOA22605020 | ELECT CAP. | 22UF 25V | HCEA1EH220T |
| DSP | CC27 | | nsp | 00MDK96104300 | CERAMIC CAP. | 0.1UF ZF1608 SIZE | HCUS1E104ZF |
| DSP | CC28 | | nsp | 00MDK96104300 | CERAMIC CAP. | 0.1UF ZF1608 SIZE | HCUS1E104ZF |
| DSP | CC29 | | nsp | 00MDK96104300 | CERAMIC CAP. | 0.1UF ZF1608 SIZE | HCUS1E104ZF |
| DSP | CC30 | | nsp | 00MOA10701620 | ELECT CAP. | 100UF 16V | HCEA1CH101T |
| DSP | CC31 | | nsp | 00MDK96104300 | CERAMIC CAP. | 0.1UF ZF1608 SIZE | HCUS1E104ZF |
| DSP | CC32 | | nsp | 00MDK96104300 | CERAMIC CAP. | 0.1UF ZF1608 SIZE | HCUS1E104ZF |
| DSP | CC33 | | nsp | 00MOA10701620 | ELECT CAP. | 100UF 16V | HCEA1CH101T |
| DSP | CC34 | | nsp | 00MOA22801620 | ELECT CAP. | 2200UF 16V | HCEA1CH222E |
| DSP | CC35 | | nsp | 00MOA22801620 | ELECT CAP. | 2200UF 16V | HCEA1CH222E |
| DSP | CC36 | | nsp | 00MOA22701620 | ELECT CAP. | 220UF 16V | HCEA1CH221T |
| DSP | CC37 | | nsp | 00MDK96104300 | CERAMIC CAP. | 0.1UF ZF1608 SIZE | HCUS1E104ZF |
| DSP | CC38 | | nsp | 00MOA10701620 | ELECT CAP. | 100UF 16V | HCEA1CH101T |
| DSP | CC39 | | nsp | 00MDK96104300 | CERAMIC CAP. | 0.1UF ZF1608 SIZE | HCUS1E104ZF |
| DSP | CC40 | | nsp | 00MOA10701620 | ELECT CAP. | 100UF 16V | HCEA1CH101T |
| DSP | CC41 | | nsp | 00MDK96104300 | CERAMIC CAP. | 0.1UF ZF1608 SIZE | HCUS1E104ZF |
| DSP | CC42 | | nsp | 00MOA10701620 | ELECT CAP. | 100UF 16V | HCEA1CH101T |
| DSP | CC43 | | nsp | 00MDK96104300 | CERAMIC CAP. | 0.1UF ZF1608 SIZE | HCUS1E104ZF |
| DSP | CC44 | | nsp | 00MDK96104300 | CERAMIC CAP. | 0.1UF ZF1608 SIZE | HCUS1E104ZF |
| DSP | CN16 | | nsp | nsp | JACK | GF102-16S-TS | KJP16GA117ZG |
| DSP | CN26 | | nsp | nsp | JACK | C.CABLE | KJP19GA117ZG |
| DSP | CN28 | | nsp | nsp | JACK | GF120-17S-TS | KJP17GA115ZG |
| DSP | CN30 | | nsp | nsp | JACK | MOLEX53014-0910 | KJP09GA19ZM |
| DSP | CN34 | /L1G | nsp | nsp | JACK | GF120-15S-TS | KJP15GA115ZG |
| DSP | CN34 | /N1B | nsp | nsp | JACK | GF120-17S-TS | KJP17GA115ZG |
| DSP | CN34 | /N1G | nsp | nsp | JACK | GF120-17S-TS | KJP17GA115ZG |
| DSP | CN34 | /N1S | nsp | nsp | JACK | GF120-17S-TS | KJP17GA115ZG |
| DSP | CN34 | /U1B | nsp | nsp | JACK | GF120-15S-TS | KJP15GA115ZG |
| DSP | CN36 | | nsp | nsp | JACK | C.CABLE | KJP11GA117ZG |
| DSP | CN38 | | nsp | nsp | JACK | GF102-13S-TS | KJP13GA117ZG |
| DSP | CN40 | | nsp | nsp | JACK | MOLEX53014-0610 | KJP06GA19ZM |
| DSP | DC10 | /L1G | nsp | 00MHD20015210 | DIODE | 1SS133T-77 | HVD1SS133MT |
| DSP | DC10 | /U1B | nsp | 00MHD20015210 | DIODE | 1SS133T-77 | HVD1SS133MT |
| DSP | DC11 | | nsp | 00MHD20015210 | DIODE | 1SS133T-77 | HVD1SS133MT |
| DSP | DC12 | /N1B | nsp | 00MHD20015210 | DIODE | 1SS133T-77 | HVD1SS133MT |
| DSP | DC12 | /N1G | nsp | 00MHD20015210 | DIODE | 1SS133T-77 | HVD1SS133MT |
| DSP | DC12 | /N1S | nsp | 00MHD20015210 | DIODE | 1SS133T-77 | HVD1SS133MT |

NOTE : “nsp” PARTS IS LISTED FOR REFERENCE ONLY, MARANTZ WILL NOT SUPPLY THESE PARTS.

| P.C.B. NAME | POS. NO. | VERS. COLOR | PART NO. (FOR EUR) | PART NO. (MJI) | PART NAME | DESCRIPTION | |
|---|---|---|---|---|---|---|---|
| DSP | DC16 | | nsp | 00MHD20015210 | DIODE | 1SS133T-77 | HVD1SS133MT |
| DSP | ET01 | | nsp | nsp | TERMINAL | PLATE , EARTH | CNE75 |
| DSP | ET02 | | nsp | nsp | TERMINAL | PLATE , EARTH | CNE75 |
| DSP | IC11 | | 00MHC700400Z0 | 00MHC700400Z0 | IC | TC74HCU04AFN | HVITC74HCU04AFN |
| DSP | IC12 | | 00MHC700400Z0 | 00MHC700400Z0 | IC | TC74HCU04AFN | HVITC74HCU04AFN |
| DSP | IC13 | | 00MHC10418030 | 00MHC10418030 | IC | LC89057W-VF4-E | HVILC89057WVF4E |
| DSP | IC14 | | 00MHC10172090 | 00MHC10172090 | IC | | HVINJM2115MDTE1 |
| DSP | IC15 | | 00MHC10172090 | 00MHC10172090 | IC | | HVINJM2115MDTE1 |
| DSP | IC16 | | 00MHC10012880 | 00MHC10012880 | IC | CS4382-KQ | HVICS4382-KQ |
| DSP | IC17 | | 90M-HC108910R | 90M-HC108910R | IC | 74VHC08 | HVI74VHC08TTR |
| DSP | IC18 | | 90M-HC108430R | 90M-HC108430R | IC | TC74HC7007AFEL | HVITC74HCT7007F |
| DSP | IC19 | | 00MHC10014880 | 00MHC10014880 | IC | CS49400-CQ | HVICS49400-CQ |
| DSP | IC20 | | 90M-HS08BWX0R | 90M-HS08BWX0R | IC | MX29LV400TTC-70 | HVIMX29LV400TTC, SR5500 |
| DSP | IC21 | | 90M-HC108910R | 90M-HC108910R | IC | 74VHC08 | HVI74VHC08TTR |
| DSP | IC22 | | 90M-HC108930R | 90M-HC108930R | IC | 74LCX32 | HVI74LCX32TTR |
| DSP | IC23 | | 90M-HC108970R | 90M-HC108970R | IC | HY57V161610ET-7 | HVI57V161610ET7 |
| DSP | IC24 | | 00MHC10102090 | 00MHC10102090 | IC | NJM2068MD-TE1 | HVINJM2068MDTE1 |
| DSP | IC25 | | 00MHC10102090 | 00MHC10102090 | IC | NJM2068MD-TE1 | HVINJM2068MDTE1 |
| DSP | IC26 | | 00MHC10102090 | 00MHC10102090 | IC | NJM2068MD-TE1 | HVINJM2068MDTE1 |
| DSP | IC27 | | 00MHC10102090 | 00MHC10102090 | IC | NJM2068MD-TE1 | HVINJM2068MDTE1 |
| DSP | IC28 | | 90M-HS27AWH0R | 90M-HS27AWH0R | IC | HD64F2398F20 | HVIHD64F2398F20 |
| DSP | IC29 | | 00MHC10099540 | 00MHC10099540 | IC | S-80145ALMC | HVIS-80145ALMC |
| DSP | IC30 | | 90M-HC108390R | 90M-HC108390R | IC | AT24C08N10SC2.7 | HVIAT24C08N10SC |
| DSP | IC31 | | 00MHC36J25050 | 00MHC36J25050 | IC REG | TA48033FTE16 | HVITA48033FTE16 |
| DSP | IC32 | | 00MHC36J25050 | 00MHC36J25050 | IC REG | TA48025FTE16 | HVITA48025FTE16 |
| DSP | IC33 | | 90M-HC108440R | 90M-HC108440R | IC | ST202EBW | HVIST202EBW |
| DSP | IC34 | | 90M-HW100710R | 90M-HW100710R | PHOTO UNIT | PC-17L1CB | HVIPC17L1CB |
| DSP | IC35 | | 00MHC10015880 | 00MHC10015880 | IC | CS5361-KS | HVICS5361-KS |
| DSP | JK11 | | 90M-YT004060R | 90M-YT004060R | TERMINAL | YKC22-0735N | HJS9U002Z |
| DSP | JK12 | | 90M-YT004060R | 90M-YT004060R | TERMINAL | YKC22-0735N | HJS9U002Z |
| DSP | JK14 | | 90M-YT004070R | 90M-YT004070R | TERMINAL | YKC22-0734N | HJS9U001Z |
| DSP | JK15 | | 90M-YT003300R | 90M-YT003300R | TERMINAL | D-SUB 9P MALE | KJP09TA87WM |
| DSP | JK16 | | 90M-YT003120R | 90M-YT003120R | TERMINAL | IN/OUT | CJJ4N036Z |
| DSP | JK20 | | 90M-YT003650R | 90M-YT003650R | TERMINAL | SILVER PLATE | CJJ4N071Z |
| DSP | L101 | /L1G | 00MFC90020120 | 00MFC90020120 | FERRITE CORE | BK 1608 HM 102T | HLZ92003Z |
| DSP | L101 | /L1G | nsp | 00MNN05000610 | RESISTOR | 0 OHM | HRJ10DJ0R0T |
| DSP | L101 | /N1B | 00MFC90020120 | 00MFC90020120 | FERRITE CORE | BK 1608 HM 102T | HLZ92003Z |
| DSP | L101 | /N1B | nsp | 00MNN05000610 | RESISTOR | 0 OHM | HRJ10DJ0R0T |
| DSP | L101 | /N1G | 00MFC90020120 | 00MFC90020120 | FERRITE CORE | BK 1608 HM 102T | HLZ92003Z |
| DSP | L101 | /N1G | nsp | 00MNN05000610 | RESISTOR | 0 OHM | HRJ10DJ0R0T |
| DSP | L101 | /N1S | 00MFC90020120 | 00MFC90020120 | FERRITE CORE | BK 1608 HM 102T | HLZ92003Z |
| DSP | L101 | /N1S | nsp | 00MNN05000610 | RESISTOR | 0 OHM | HRJ10DJ0R0T |
| DSP | L101 | /U1B | 00MFC90020120 | 00MFC90020120 | FERRITE CORE | BK 1608 HM 102T | HLZ92003Z |
| DSP | L101 | /U1B | nsp | 00MNN05000610 | RESISTOR | 0 OHM | HRJ10DJ0R0T |
| DSP | LC72 | | nsp | 00MNN05000610 | RESISTOR | 0 OHM | HRJ10DJ0R0T |
| DSP | LC79 | | nsp | 00MNN05000610 | RESISTOR | 0 OHM | HRJ10DJ0R0T |
| DSP | LC80 | | nsp | 00MNN05000610 | RESISTOR | 0 OHM | HRJ10DJ0R0T |
| DSP | LC81 | | nsp | 00MNN05000610 | RESISTOR | 0 OHM | HRJ10DJ0R0T |
| DSP | LC82 | | nsp | 00MNN05000610 | RESISTOR | 0 OHM | HRJ10DJ0R0T |
| DSP | LC83 | | nsp | 00MNN05000610 | RESISTOR | 0 OHM | HRJ10DJ0R0T |
| DSP | LD01 | /N1B | nsp | 00MNN05000610 | RESISTOR | 0 OHM | HRJ10DJ0R0T |
| DSP | LD01 | /N1G | nsp | 00MNN05000610 | RESISTOR | 0 OHM | HRJ10DJ0R0T |
| DSP | LD01 | /N1S | nsp | 00MNN05000610 | RESISTOR | 0 OHM | HRJ10DJ0R0T |
| DSP | LD03 | /U1B | nsp | 00MNN05000610 | RESISTOR | 0 OHM | HRJ10DJ0R0T |
| DSP | Q101 | | 90M-HX900010R | 90M-HX900010R | TRANSISTOR | KTD1304 | HVTKTD1304T |
| DSP | Q102 | | 90M-HX900010R | 90M-HX900010R | TRANSISTOR | KTD1304 | HVTKTD1304T |
| DSP | Q103 | | 90M-HX600010R | 90M-HX600010R | TRANSISTOR | KRA102S | HVTKRA102S |
| DSP | Q105 | | 90M-HX600010R | 90M-HX600010R | TRANSISTOR | KRA102S | HVTKRA102S |
| DSP | Q106 | | 00MHT30001000 | 00MHT30001000 | TRANSISTOR | | HVTKTC3199YT |
| DSP | Q107 | | 90M-HX600010R | 90M-HX600010R | TRANSISTOR | KRA102S | HVTKRA102S |
| DSP | Q108 | | 90M-HX600010R | 90M-HX600010R | TRANSISTOR | KRA102S | HVTKRA102S |
| DSP | QC10 | | 90M-HX600010R | 90M-HX600010R | TRANSISTOR | KRA102S | HVTKRA102S |
| DSP | QC11 | | 90M-HX800010R | 90M-HX800010R | TRANSISTOR | KRC102S | HVTKRC102S |
| DSP | QC12 | | 90M-HX600010R | 90M-HX600010R | TRANSISTOR | KRA102S | HVTKRA102S |
| DSP | R101 | | nsp | 00MNN05100610 | RESISTOR | 1608 SIZE | HRJ10DJ100T |
| DSP | R103 | | nsp | 00MNN05100610 | RESISTOR | 1608 SIZE | HRJ10DJ100T |
| DSP | R105 | | nsp | 00MNN05101610 | RESISTOR | 1608 SIZE | HRJ10DJ101T |
| DSP | R106 | | nsp | 00MNN05101610 | RESISTOR | 1608 SIZE | HRJ10DJ101T |

NOTE : “nsp” PARTS IS LISTED FOR REFERENCE ONLY, MARANTZ WILL NOT SUPPLY THESE PARTS.

| P.C.B. NAME | POS. NO. | VERS. COLOR | PART NO. (FOR EUR) | PART NO. (MJI) | PART NAME | DESCRIPTION | |
|---|---|---|---|---|---|---|---|
| DSP | R107 | | nsp | 00MNN05750610 | RESISTOR | 1608 SIZE | HRJ10DJ750T |
| DSP | R108 | | nsp | 00MNN05102610 | RESISTOR | 1608 SIZE | HRJ10DJ102T |
| DSP | R109 | | nsp | 00MNN05104610 | RESISTOR | 100K OHM | HRJ10DJ104T |
| DSP | R110 | | nsp | 00MNN05472610 | RESISTOR | 1608 SIZE | HRJ10DJ472T |
| DSP | R111 | | nsp | 00MNN05750610 | RESISTOR | 1608 SIZE | HRJ10DJ750T |
| DSP | R112 | | nsp | 00MNN05102610 | RESISTOR | 1608 SIZE | HRJ10DJ102T |
| DSP | R113 | | nsp | 00MNN05104610 | RESISTOR | 100K OHM | HRJ10DJ104T |
| DSP | R114 | | nsp | 00MNN05472610 | RESISTOR | 1608 SIZE | HRJ10DJ472T |
| DSP | R115 | | nsp | 00MNN05563610 | RESISTOR | 56K OHM | HRJ10DJ563T |
| DSP | R117 | | nsp | 00MNN05562610 | RESISTOR | 5.6K OHM | HRJ10DJ562T |
| DSP | R118 | | nsp | 00MNN05103610 | RESISTOR | 10K OHM | HRJ10DJ103T |
| DSP | R119 | | nsp | 00MNN05750610 | RESISTOR | 1608 SIZE | HRJ10DJ750T |
| DSP | R120 | | nsp | 00MNN05100610 | RESISTOR | 1608 SIZE | HRJ10DJ100T |
| DSP | R121 | | nsp | 00MNN05750610 | RESISTOR | 1608 SIZE | HRJ10DJ750T |
| DSP | R122 | | nsp | 00MNN05101610 | RESISTOR | 1608 SIZE | HRJ10DJ101T |
| DSP | R123 | | nsp | 00MNN05104610 | RESISTOR | 100K OHM | HRJ10DJ104T |
| DSP | R124 | | nsp | 00MNN05472610 | RESISTOR | 1608 SIZE | HRJ10DJ472T |
| DSP | R125 | | nsp | 00MNN05100610 | RESISTOR | 1608 SIZE | HRJ10DJ100T |
| DSP | R126 | | nsp | 00MNN05100610 | RESISTOR | 1608 SIZE | HRJ10DJ100T |
| DSP | R127 | | nsp | 00MNN05104610 | RESISTOR | 100K OHM | HRJ10DJ104T |
| DSP | R128 | | nsp | 00MNN05472610 | RESISTOR | 1608 SIZE | HRJ10DJ472T |
| DSP | R129 | | nsp | 00MNN05330610 | RESISTOR | 1608 SIZE | HRJ10DJ330T |
| DSP | R131 | | nsp | 00MNN05221610 | RESISTOR | 1608 SIZE | HRJ10DJ221T |
| DSP | R132 | | nsp | 00MNN05101610 | RESISTOR | 1608 SIZE | HRJ10DJ101T |
| DSP | R133 | | nsp | 00MNN05101610 | RESISTOR | 1608 SIZE | HRJ10DJ101T |
| DSP | R134 | | nsp | 00MNN05101610 | RESISTOR | 1608 SIZE | HRJ10DJ101T |
| DSP | R135 | | nsp | 00MNN05101610 | RESISTOR | 1608 SIZE | HRJ10DJ101T |
| DSP | R136 | | nsp | 00MNN05101610 | RESISTOR | 1608 SIZE | HRJ10DJ101T |
| DSP | R137 | | nsp | 00MNN05101610 | RESISTOR | 1608 SIZE | HRJ10DJ101T |
| DSP | R138 | | nsp | 00MNN05101610 | RESISTOR | 1608 SIZE | HRJ10DJ101T |
| DSP | R139 | | nsp | 00MNN05010610 | RESISTOR | 1 OHM | HRJ10DJ1R0T |
| DSP | R140 | | nsp | 00MNN05105610 | RESISTOR | 1608 SIZE | HRJ10DJ105T |
| DSP | R141 | | nsp | 00MNN05103610 | RESISTOR | 10K OHM | HRJ10DJ103T |
| DSP | R142 | | nsp | 00MNN05103610 | RESISTOR | 10K OHM | HRJ10DJ103T |
| DSP | R143 | | nsp | 00MNN05103610 | RESISTOR | 10K OHM | HRJ10DJ103T |
| DSP | R144 | | nsp | 00MNN05103610 | RESISTOR | 10K OHM | HRJ10DJ103T |
| DSP | R145 | | nsp | 00MNN05332610 | RESISTOR | 3.3K OHM | HRJ10DJ332T |
| DSP | R146 | | nsp | 00MNN05223610 | RESISTOR | 1608 SIZE | HRJ10DJ223T |
| DSP | R147 | | nsp | 00MNN05473610 | RESISTOR | 1608SIZE | HRJ10DJ473T |
| DSP | R148 | | nsp | 00MNN05682610 | RESISTOR | 1608 SIZE | HRJ10DJ682T |
| DSP | R149 | | nsp | 00MNN05104610 | RESISTOR | 100K OHM | HRJ10DJ104T |
| DSP | R150 | | nsp | 00MNN05272610 | RESISTOR | 2.7K OHM | HRJ10DJ272T |
| DSP | R151 | | nsp | 00MNN05472610 | RESISTOR | 1608 SIZE | HRJ10DJ472T |
| DSP | R152 | | nsp | 00MNN05472610 | RESISTOR | 1608 SIZE | HRJ10DJ472T |
| DSP | R153 | | nsp | 00MNN05562610 | RESISTOR | 5.6K OHM | HRJ10DJ562T |
| DSP | R154 | | nsp | 00MNN05472610 | RESISTOR | 1608 SIZE | HRJ10DJ472T |
| DSP | R155 | | nsp | 00MNN05101610 | RESISTOR | 1608 SIZE | HRJ10DJ101T |
| DSP | R156 | | nsp | 00MNN05101610 | RESISTOR | 1608 SIZE | HRJ10DJ101T |
| DSP | R157 | | nsp | 00MNN05682610 | RESISTOR | 1608 SIZE | HRJ10DJ682T |
| DSP | R158 | | nsp | 00MNN05104610 | RESISTOR | 100K OHM | HRJ10DJ104T |
| DSP | R159 | | nsp | 00MNN05272610 | RESISTOR | 2.7K OHM | HRJ10DJ272T |
| DSP | R160 | | nsp | 00MNN05472610 | RESISTOR | 1608 SIZE | HRJ10DJ472T |
| DSP | R161 | | nsp | 00MNN05472610 | RESISTOR | 1608 SIZE | HRJ10DJ472T |
| DSP | R162 | | nsp | 00MNN05562610 | RESISTOR | 5.6K OHM | HRJ10DJ562T |
| DSP | R163 | | nsp | 00MNN05472610 | RESISTOR | 1608 SIZE | HRJ10DJ472T |
| DSP | R164 | | nsp | 00MNN05101610 | RESISTOR | 1608 SIZE | HRJ10DJ101T |
| DSP | R165 | | nsp | 00MNN05101610 | RESISTOR | 1608 SIZE | HRJ10DJ101T |
| DSP | R166 | | nsp | 00MNN05222610 | RESISTOR | 1608 SIZE | HRJ10DJ222T |
| DSP | R167 | | nsp | 00MNN05222610 | RESISTOR | 1608 SIZE | HRJ10DJ222T |
| DSP | R168 | | nsp | 00MNN05105610 | RESISTOR | 1608 SIZE | HRJ10DJ105T |
| DSP | R170 | | nsp | 00MNN05223610 | RESISTOR | 1608 SIZE | HRJ10DJ223T |
| DSP | R171 | | nsp | 00MNN05223610 | RESISTOR | 1608 SIZE | HRJ10DJ223T |
| DSP | R172 | | nsp | 00MNN05270610 | RESISTOR | 1608 SIZE | HRJ10DJ270T |
| DSP | R173 | | nsp | 00MNN05101610 | RESISTOR | 1608 SIZE | HRJ10DJ101T |
| DSP | R174 | | nsp | 00MNN05330610 | RESISTOR | 1608 SIZE | HRJ10DJ330T |
| DSP | R175 | | nsp | 00MNN05330610 | RESISTOR | 1608 SIZE | HRJ10DJ330T |
| DSP | R176 | | nsp | 00MNN05330610 | RESISTOR | 1608 SIZE | HRJ10DJ330T |
| DSP | R177 | | nsp | 00MNN05330610 | RESISTOR | 1608 SIZE | HRJ10DJ330T |

NOTE : “nsp” PARTS IS LISTED FOR REFERENCE ONLY, MARANTZ WILL NOT SUPPLY THESE PARTS.

| P.C.B. NAME | POS. NO. | VERS. COLOR | PART NO. (FOR EUR) | PART NO. (MJI) | PART NAME | DESCRIPTION | |
|---|---|---|---|---|---|---|---|
| DSP | R178 | | nsp | 00MNN05103610 | RESISTOR | 10K OHM | HRJ10DJ103T |
| DSP | R179 | | nsp | 00MNN05103610 | RESISTOR | 10K OHM | HRJ10DJ103T |
| DSP | R180 | | nsp | 00MNN05103610 | RESISTOR | 10K OHM | HRJ10DJ103T |
| DSP | R181 | | nsp | 00MNN05103610 | RESISTOR | 10K OHM | HRJ10DJ103T |
| DSP | R182 | | nsp | 00MNN05103610 | RESISTOR | 10K OHM | HRJ10DJ103T |
| DSP | R183 | | nsp | 00MNN05103610 | RESISTOR | 10K OHM | HRJ10DJ103T |
| DSP | R184 | | nsp | 00MNN05152610 | RESISTOR | 1608 SIZE | HRJ10DJ152T |
| DSP | R185 | | nsp | 00MNN05103610 | RESISTOR | 10K OHM | HRJ10DJ103T |
| DSP | R186 | | nsp | 00MNN05103610 | RESISTOR | 10K OHM | HRJ10DJ103T |
| DSP | R187 | | nsp | 00MNN05103610 | RESISTOR | 10K OHM | HRJ10DJ103T |
| DSP | R188 | | nsp | 00MNN05103610 | RESISTOR | 10K OHM | HRJ10DJ103T |
| DSP | R189 | | nsp | 00MNN05562610 | RESISTOR | 5.6K OHM | HRJ10DJ562T |
| DSP | R190 | | nsp | 00MNN05103610 | RESISTOR | 10K OHM | HRJ10DJ103T |
| DSP | R191 | | nsp | 00MNN05103610 | RESISTOR | 10K OHM | HRJ10DJ103T |
| DSP | R192 | | nsp | 00MNN05103610 | RESISTOR | 10K OHM | HRJ10DJ103T |
| DSP | R193 | | nsp | 00MNN05332610 | RESISTOR | 3.3K OHM | HRJ10DJ332T |
| DSP | R194 | | nsp | 00MNN05103610 | RESISTOR | 10K OHM | HRJ10DJ103T |
| DSP | R195 | | nsp | 00MNN05562610 | RESISTOR | 5.6K OHM | HRJ10DJ562T |
| DSP | R196 | | nsp | 00MNN05332610 | RESISTOR | 3.3K OHM | HRJ10DJ332T |
| DSP | R197 | | nsp | 00MNN05332610 | RESISTOR | 3.3K OHM | HRJ10DJ332T |
| DSP | R198 | | nsp | 00MNN05332610 | RESISTOR | 3.3K OHM | HRJ10DJ332T |
| DSP | R199 | | nsp | 00MNN05103610 | RESISTOR | 10K OHM | HRJ10DJ103T |
| DSP | R200 | | nsp | 00MNN05103610 | RESISTOR | 10K OHM | HRJ10DJ103T |
| DSP | R201 | | nsp | 00MNN05103610 | RESISTOR | 10K OHM | HRJ10DJ103T |
| DSP | R202 | | nsp | 00MNN05332610 | RESISTOR | 3.3K OHM | HRJ10DJ332T |
| DSP | R203 | | nsp | 00MNN05332610 | RESISTOR | 3.3K OHM | HRJ10DJ332T |
| DSP | R204 | | nsp | 00MNN05103610 | RESISTOR | 10K OHM | HRJ10DJ103T |
| DSP | R205 | | nsp | 00MNN05103610 | RESISTOR | 10K OHM | HRJ10DJ103T |
| DSP | R206 | | nsp | 00MNN05562610 | RESISTOR | 5.6K OHM | HRJ10DJ562T |
| DSP | R207 | | nsp | 00MNN05332610 | RESISTOR | 3.3K OHM | HRJ10DJ332T |
| DSP | R208 | | nsp | 00MNN05103610 | RESISTOR | 10K OHM | HRJ10DJ103T |
| DSP | R209 | | nsp | 00MNN05103610 | RESISTOR | 10K OHM | HRJ10DJ103T |
| DSP | R210 | | nsp | 00MNN05103610 | RESISTOR | 10K OHM | HRJ10DJ103T |
| DSP | R211 | | nsp | 00MNN05103610 | RESISTOR | 10K OHM | HRJ10DJ103T |
| DSP | R212 | | nsp | 00MNN05103610 | RESISTOR | 10K OHM | HRJ10DJ103T |
| DSP | R213 | | nsp | 00MNN05103610 | RESISTOR | 10K OHM | HRJ10DJ103T |
| DSP | R214 | | nsp | 00MNN05103610 | RESISTOR | 10K OHM | HRJ10DJ103T |
| DSP | R215 | | nsp | 00MNN05103610 | RESISTOR | 10K OHM | HRJ10DJ103T |
| DSP | R216 | | nsp | 00MNN05103610 | RESISTOR | 10K OHM | HRJ10DJ103T |
| DSP | R217 | | nsp | 00MNN05103610 | RESISTOR | 10K OHM | HRJ10DJ103T |
| DSP | R218 | | nsp | 00MNN05103610 | RESISTOR | 10K OHM | HRJ10DJ103T |
| DSP | R229 | | nsp | 00MNN05103610 | RESISTOR | 10K OHM | HRJ10DJ103T |
| DSP | R230 | | nsp | 00MNN05103610 | RESISTOR | 10K OHM | HRJ10DJ103T |
| DSP | R231 | | nsp | 00MNN05103610 | RESISTOR | 10K OHM | HRJ10DJ103T |
| DSP | R232 | | nsp | 00MNN05103610 | RESISTOR | 10K OHM | HRJ10DJ103T |
| DSP | R233 | | nsp | 00MNN05103610 | RESISTOR | 10K OHM | HRJ10DJ103T |
| DSP | R234 | | nsp | 00MNN05103610 | RESISTOR | 10K OHM | HRJ10DJ103T |
| DSP | R235 | | nsp | 00MNN05103610 | RESISTOR | 10K OHM | HRJ10DJ103T |
| DSP | R236 | | nsp | 00MNN05103610 | RESISTOR | 10K OHM | HRJ10DJ103T |
| DSP | R237 | | nsp | 00MNN05103610 | RESISTOR | 10K OHM | HRJ10DJ103T |
| DSP | R238 | | nsp | 00MNN05103610 | RESISTOR | 10K OHM | HRJ10DJ103T |
| DSP | R239 | | nsp | 00MNN05330610 | RESISTOR | 1608 SIZE | HRJ10DJ330T |
| DSP | R240 | | nsp | 00MNN05103610 | RESISTOR | 10K OHM | HRJ10DJ103T |
| DSP | R241 | | nsp | 00MNN05330610 | RESISTOR | 1608 SIZE | HRJ10DJ330T |
| DSP | R242 | | nsp | 00MNN05330610 | RESISTOR | 1608 SIZE | HRJ10DJ330T |
| DSP | R243 | | nsp | 00MNN05330610 | RESISTOR | 1608 SIZE | HRJ10DJ330T |
| DSP | R245 | | nsp | 00MNN05223610 | RESISTOR | 1608 SIZE | HRJ10DJ223T |
| DSP | R247 | | nsp | 00MNN05332610 | RESISTOR | 00200-0105 | CRJ10DJ332T |
| DSP | R248 | | nsp | 00MNN05332610 | RESISTOR | 00200-0105 | CRJ10DJ332T |
| DSP | R249 | | nsp | 00MNN05682610 | RESISTOR | 1608 SIZE | CRJ10DJ682T |
| DSP | R250 | | nsp | 00MNN05152610 | RESISTOR | 00200-0119 | CRJ10DJ152T |
| DSP | R251 | | nsp | 00MNN05682610 | RESISTOR | 1608 SIZE | CRJ10DJ682T |
| DSP | R252 | | nsp | 00MNN05152610 | RESISTOR | 00200-0119 | CRJ10DJ152T |
| DSP | R253 | | nsp | 00MNN05101610 | RESISTOR | 1608 SIZE | HRJ10DJ101T |
| DSP | R254 | | nsp | 00MNN05104610 | RESISTOR | 100K OHM | HRJ10DJ104T |
| DSP | R255 | | nsp | 00MNN05332610 | RESISTOR | 00200-0105 | CRJ10DJ332T |
| DSP | R256 | | nsp | 00MNN05332610 | RESISTOR | 00200-0105 | CRJ10DJ332T |
| DSP | R257 | | nsp | 00MNN05682610 | RESISTOR | 1608 SIZE | CRJ10DJ682T |

NOTE : “nsp” PARTS IS LISTED FOR REFERENCE ONLY, MARANTZ WILL NOT SUPPLY THESE PARTS.

| P.C.B. NAME | POS. NO. | VERS. COLOR | PART NO. (FOR EUR) | PART NO. (MJI) | PART NAME | DESCRIPTION | |
|---|---|---|---|---|---|---|---|
| DSP | R258 | | nsp | 00MNN05152610 | RESISTOR | 00200-0119 | CRJ10DJ152T |
| DSP | R259 | | nsp | 00MNN05682610 | RESISTOR | 1608 SIZE | CRJ10DJ682T |
| DSP | R260 | | nsp | 00MNN05152610 | RESISTOR | 00200-0119 | CRJ10DJ152T |
| DSP | R261 | | nsp | 00MNN05101610 | RESISTOR | 1608 SIZE | HRJ10DJ101T |
| DSP | R262 | | nsp | 00MNN05104610 | RESISTOR | 100K OHM | HRJ10DJ104T |
| DSP | R263 | | nsp | 00MNN05332610 | RESISTOR | 00200-0105 | CRJ10DJ332T |
| DSP | R264 | | nsp | 00MNN05332610 | RESISTOR | 00200-0105 | CRJ10DJ332T |
| DSP | R265 | | nsp | 00MNN05682610 | RESISTOR | 1608 SIZE | CRJ10DJ682T |
| DSP | R266 | | nsp | 00MNN05152610 | RESISTOR | 00200-0119 | CRJ10DJ152T |
| DSP | R267 | | nsp | 00MNN05682610 | RESISTOR | 1608 SIZE | CRJ10DJ682T |
| DSP | R268 | | nsp | 00MNN05152610 | RESISTOR | 00200-0119 | CRJ10DJ152T |
| DSP | R269 | | nsp | 00MNN05101610 | RESISTOR | 1608 SIZE | HRJ10DJ101T |
| DSP | R270 | | nsp | 00MNN05104610 | RESISTOR | 100K OHM | HRJ10DJ104T |
| DSP | R271 | | nsp | 00MNN05332610 | RESISTOR | 00200-0105 | CRJ10DJ332T |
| DSP | R272 | | nsp | 00MNN05332610 | RESISTOR | 00200-0105 | CRJ10DJ332T |
| DSP | R273 | | nsp | 00MNN05682610 | RESISTOR | 1608 SIZE | CRJ10DJ682T |
| DSP | R274 | | nsp | 00MNN05152610 | RESISTOR | 00200-0119 | CRJ10DJ152T |
| DSP | R275 | | nsp | 00MNN05682610 | RESISTOR | 1608 SIZE | CRJ10DJ682T |
| DSP | R276 | | nsp | 00MNN05152610 | RESISTOR | 00200-0119 | CRJ10DJ152T |
| DSP | R277 | | nsp | 00MNN05101610 | RESISTOR | 1608 SIZE | HRJ10DJ101T |
| DSP | R278 | | nsp | 00MNN05104610 | RESISTOR | 100K OHM | HRJ10DJ104T |
| DSP | R279 | | nsp | 00MNN05332610 | RESISTOR | 00200-0105 | CRJ10DJ332T |
| DSP | R280 | | nsp | 00MNN05332610 | RESISTOR | 00200-0105 | CRJ10DJ332T |
| DSP | R281 | | nsp | 00MNN05682610 | RESISTOR | 1608 SIZE | CRJ10DJ682T |
| DSP | R282 | | nsp | 00MNN05152610 | RESISTOR | 00200-0119 | CRJ10DJ152T |
| DSP | R283 | | nsp | 00MNN05682610 | RESISTOR | 1608 SIZE | CRJ10DJ682T |
| DSP | R284 | | nsp | 00MNN05152610 | RESISTOR | 00200-0119 | CRJ10DJ152T |
| DSP | R285 | | nsp | 00MNN05101610 | RESISTOR | 1608 SIZE | HRJ10DJ101T |
| DSP | R286 | | nsp | 00MNN05104610 | RESISTOR | 100K OHM | HRJ10DJ104T |
| DSP | R287 | | nsp | 00MNN05332610 | RESISTOR | 00200-0105 | CRJ10DJ332T |
| DSP | R288 | | nsp | 00MNN05332610 | RESISTOR | 00200-0105 | CRJ10DJ332T |
| DSP | R289 | | nsp | 00MNN05682610 | RESISTOR | 1608 SIZE | CRJ10DJ682T |
| DSP | R290 | | nsp | 00MNN05152610 | RESISTOR | 00200-0119 | CRJ10DJ152T |
| DSP | R291 | | nsp | 00MNN05682610 | RESISTOR | 1608 SIZE | CRJ10DJ682T |
| DSP | R292 | | nsp | 00MNN05152610 | RESISTOR | 00200-0119 | CRJ10DJ152T |
| DSP | R293 | | nsp | 00MNN05101610 | RESISTOR | 1608 SIZE | HRJ10DJ101T |
| DSP | R294 | | nsp | 00MNN05104610 | RESISTOR | 100K OHM | HRJ10DJ104T |
| DSP | R295 | | nsp | 00MNN05332610 | RESISTOR | 00200-0105 | CRJ10DJ332T |
| DSP | R296 | | nsp | 00MNN05332610 | RESISTOR | 00200-0105 | CRJ10DJ332T |
| DSP | R297 | | nsp | 00MNN05682610 | RESISTOR | 1608 SIZE | CRJ10DJ682T |
| DSP | R298 | | nsp | 00MNN05152610 | RESISTOR | 00200-0119 | CRJ10DJ152T |
| DSP | R299 | | nsp | 00MNN05682610 | RESISTOR | 1608 SIZE | CRJ10DJ682T |
| DSP | R300 | | nsp | 00MNN05152610 | RESISTOR | 00200-0119 | CRJ10DJ152T |
| DSP | R301 | | nsp | 00MNN05101610 | RESISTOR | 1608 SIZE | HRJ10DJ101T |
| DSP | R302 | | nsp | 00MNN05104610 | RESISTOR | 100K OHM | HRJ10DJ104T |
| DSP | R303 | | nsp | 00MNN05470610 | RESISTOR | 1608 SIZE | HRJ10DJ470T |
| DSP | R306 | | nsp | 00MNN05473610 | RESISTOR | 1608SIZE | HRJ10DJ473T |
| DSP | R307 | | nsp | 00MNN05152610 | RESISTOR | 1608 SIZE | HRJ10DJ152T |
| DSP | R308 | | nsp | 00MNN05473610 | RESISTOR | 1608SIZE | HRJ10DJ473T |
| DSP | R309 | | nsp | 00MNN05183610 | RESISTOR | 18K OHM | HRJ10DJ183T |
| DSP | R310 | | nsp | 00MNN05470610 | RESISTOR | 1608 SIZE | HRJ10DJ470T |
| DSP | R321 | | nsp | 00MNN05332610 | RESISTOR | 00200-0105 | CRJ10DJ332T |
| DSP | R322 | | nsp | 00MNN05332610 | RESISTOR | 00200-0105 | CRJ10DJ332T |
| DSP | R323 | | nsp | 00MNN05682610 | RESISTOR | 1608 SIZE | CRJ10DJ682T |
| DSP | R324 | | nsp | 00MNN05152610 | RESISTOR | 00200-0119 | CRJ10DJ152T |
| DSP | R325 | | nsp | 00MNN05152610 | RESISTOR | 00200-0119 | CRJ10DJ152T |
| DSP | R326 | | nsp | 00MNN05682610 | RESISTOR | 1608 SIZE | CRJ10DJ682T |
| DSP | R327 | | nsp | 00MNN05101610 | RESISTOR | 1608 SIZE | HRJ10DJ101T |
| DSP | R328 | | nsp | 00MNN05104610 | RESISTOR | 100K OHM | HRJ10DJ104T |
| DSP | R395 | | nsp | 00MNN05221610 | RESISTOR | 1608 SIZE | HRJ10DJ221T |
| DSP | R396 | | nsp | 00MNN05183610 | RESISTOR | 18K OHM | HRJ10DJ183T |
| DSP | RC11 | | nsp | 00MNN05103610 | RESISTOR | 10K OHM | HRJ10DJ103T |
| DSP | RC12 | | nsp | 00MNN05562610 | RESISTOR | 5.6K OHM | HRJ10DJ562T |
| DSP | RC13 | | nsp | 00MNN05223610 | RESISTOR | 1608 SIZE | HRJ10DJ223T |
| DSP | RC14 | | nsp | 00MNN05473610 | RESISTOR | 1608SIZE | HRJ10DJ473T |
| DSP | RC15 | | nsp | 00MNN05473610 | RESISTOR | 1608SIZE | HRJ10DJ473T |
| DSP | RC16 | | nsp | 00MNN05473610 | RESISTOR | 1608SIZE | HRJ10DJ473T |
| DSP | RC17 | | nsp | 00MNN05473610 | RESISTOR | 1608SIZE | HRJ10DJ473T |

NOTE : “nsp” PARTS IS LISTED FOR REFERENCE ONLY, MARANTZ WILL NOT SUPPLY THESE PARTS.

| P.C.B. NAME | POS. NO. | VERS. COLOR | PART NO. (FOR EUR) | PART NO. (MJI) | PART NAME | DESCRIPTION | |
|---|---|---|---|---|---|---|---|
| DSP | RC18 | | nsp | 00MNN05473610 | RESISTOR | 1608SIZE | HRJ10DJ473T |
| DSP | RC19 | | nsp | 00MNN05473610 | RESISTOR | 1608SIZE | HRJ10DJ473T |
| DSP | RC20 | | nsp | 00MNN05473610 | RESISTOR | 1608SIZE | HRJ10DJ473T |
| DSP | RC21 | | nsp | 00MNN05473610 | RESISTOR | 1608SIZE | HRJ10DJ473T |
| DSP | RC22 | | nsp | 00MNN05473610 | RESISTOR | 1608SIZE | HRJ10DJ473T |
| DSP | RC23 | | nsp | 00MNN05473610 | RESISTOR | 1608SIZE | HRJ10DJ473T |
| DSP | RC24 | | nsp | 00MNN05473610 | RESISTOR | 1608SIZE | HRJ10DJ473T |
| DSP | RC25 | | nsp | 00MNN05473610 | RESISTOR | 1608SIZE | HRJ10DJ473T |
| DSP | RC26 | | nsp | 00MNN05010610 | RESISTOR | 1 OHM | HRJ10DJ1R0T |
| DSP | RC27 | | nsp | 00MNN05105610 | RESISTOR | 1608 SIZE | HRJ10DJ105T |
| DSP | RC30 | | nsp | 00MNN05103610 | RESISTOR | 10K OHM | HRJ10DJ103T |
| DSP | RC31 | | nsp | 00MNN05472610 | RESISTOR | 1608 SIZE | HRJ10DJ472T |
| DSP | RC32 | | nsp | 00MNN05472610 | RESISTOR | 1608 SIZE | HRJ10DJ472T |
| DSP | RC33 | | nsp | 00MNN05472610 | RESISTOR | 1608 SIZE | HRJ10DJ472T |
| DSP | RC34 | | nsp | 00MNN05473610 | RESISTOR | 1608SIZE | HRJ10DJ473T |
| DSP | RC35 | | nsp | 00MNN05473610 | RESISTOR | 1608SIZE | HRJ10DJ473T |
| DSP | RC36 | /L1G | nsp | 00MNN05563610 | RESISTOR | 56K OHM | HRJ10DJ563T |
| DSP | RC36 | /U1B | nsp | 00MNN05473610 | RESISTOR | 1608SIZE | HRJ10DJ473T |
| DSP | RC37 | /L1G | nsp | 00MNN05393610 | RESISTOR | 1608 SIZE | HRJ10DJ393T |
| DSP | RC37 | /N1B | nsp | 00MNN05000610 | RESISTOR | 0 OHM | HRJ10DJ0R0T |
| DSP | RC37 | /N1G | nsp | 00MNN05000610 | RESISTOR | 0 OHM | HRJ10DJ0R0T |
| DSP | RC37 | /N1S | nsp | 00MNN05000610 | RESISTOR | 0 OHM | HRJ10DJ0R0T |
| DSP | RC37 | /U1B | nsp | 00MNN05223610 | RESISTOR | 1608 SIZE | HRJ10DJ223T |
| DSP | RC39 | | nsp | 00MNN05103610 | RESISTOR | 10K OHM | HRJ10DJ103T |
| DSP | RC40 | | nsp | 00MNN05473610 | RESISTOR | 1608SIZE | HRJ10DJ473T |
| DSP | RC42 | | nsp | 00MNN05473610 | RESISTOR | 1608SIZE | HRJ10DJ473T |
| DSP | RC43 | | nsp | 00MNN05473610 | RESISTOR | 1608SIZE | HRJ10DJ473T |
| DSP | RC44 | | nsp | 00MNN05102610 | RESISTOR | 1608 SIZE | HRJ10DJ102T |
| DSP | RC45 | | nsp | 00MNN05473610 | RESISTOR | 1608SIZE | HRJ10DJ473T |
| DSP | RC46 | | nsp | 00MNN05473610 | RESISTOR | 1608SIZE | HRJ10DJ473T |
| DSP | RC47 | | nsp | 00MNN05473610 | RESISTOR | 1608SIZE | HRJ10DJ473T |
| DSP | RC48 | | nsp | 00MNN05473610 | RESISTOR | 1608SIZE | HRJ10DJ473T |
| DSP | RC49 | | nsp | 00MNN05473610 | RESISTOR | 1608SIZE | HRJ10DJ473T |
| DSP | RC50 | | nsp | 00MNN05473610 | RESISTOR | 1608SIZE | HRJ10DJ473T |
| DSP | RC51 | | nsp | 00MNN05473610 | RESISTOR | 1608SIZE | HRJ10DJ473T |
| DSP | RC52 | | nsp | 00MNN05473610 | RESISTOR | 1608SIZE | HRJ10DJ473T |
| DSP | RC53 | | nsp | 00MNN05473610 | RESISTOR | 1608SIZE | HRJ10DJ473T |
| DSP | RC54 | | nsp | 00MNN05000610 | RESISTOR | 0 OHM | HRJ10DJ0R0T |
| DSP | RC55 | | nsp | 00MNN05223610 | RESISTOR | 1608 SIZE | HRJ10DJ223T |
| DSP | RC56 | | nsp | 00MNN05223610 | RESISTOR | 1608 SIZE | HRJ10DJ223T |
| DSP | RC59 | | nsp | 00MNN05473610 | RESISTOR | 1608SIZE | HRJ10DJ473T |
| DSP | RC60 | | nsp | 00MNN05473610 | RESISTOR | 1608SIZE | HRJ10DJ473T |
| DSP | RC61 | | nsp | 00MNN05473610 | RESISTOR | 1608SIZE | HRJ10DJ473T |
| DSP | RC62 | | nsp | 00MNN05473610 | RESISTOR | 1608SIZE | HRJ10DJ473T |
| DSP | RC63 | | nsp | 00MNN05683610 | RESISTOR | 1608 SIZE | HRJ10DJ683T |
| DSP | RC64 | | nsp | 00MNN05222610 | RESISTOR | 1608 SIZE | HRJ10DJ222T |
| DSP | RC65 | | nsp | 00MNN05102610 | RESISTOR | 1608 SIZE | HRJ10DJ102T |
| DSP | RC66 | | nsp | 00MNN05473610 | RESISTOR | 1608SIZE | HRJ10DJ473T |
| DSP | RC67 | | nsp | 00MNN05123610 | RESISTOR | 1608 SIZE | HRJ10DJ123T |
| DSP | RN11 | | 90M-BW000370R | 90M-BW000370R | RESISTOR COMPO. | ARC 241 100R | HRJ104DJ101T |
| DSP | RN12 | | 90M-BW000370R | 90M-BW000370R | RESISTOR COMPO. | ARC 241 100R | HRJ104DJ101T |
| DSP | RN13 | | 90M-BW000370R | 90M-BW000370R | RESISTOR COMPO. | ARC 241 100R | HRJ104DJ101T |
| DSP | RN14 | | 90M-BW000370R | 90M-BW000370R | RESISTOR COMPO. | ARC 241 100R | HRJ104DJ101T |
| DSP | RN15 | | 90M-BW000370R | 90M-BW000370R | RESISTOR COMPO. | ARC 241 100R | HRJ104DJ101T |
| DSP | RN16 | | 90M-BW000370R | 90M-BW000370R | RESISTOR COMPO. | ARC 241 100R | HRJ104DJ101T |
| DSP | RN17 | | 90M-BW000370R | 90M-BW000370R | RESISTOR COMPO. | ARC 241 100R | HRJ104DJ101T |
| DSP | RN18 | | 90M-BW000370R | 90M-BW000370R | RESISTOR COMPO. | ARC 241 100R | HRJ104DJ101T |
| DSP | RN19 | | 90M-BW000370R | 90M-BW000370R | RESISTOR COMPO. | ARC 241 100R | HRJ104DJ101T |
| DSP | SW10 | | 90M-SP001290R | 90M-SP001290R | SWITCH | SPUJ19XSM011 | HSH2B018Z |
| DSP | X101 | | 90M-JX001180R | 90M-JX001180R | CRYSTAL | 12288HZ | HOX12288E320TF |
| DSP | XC11 | | 90M-JX001190R | 90M-JX001190R | CRYSTAL | 20MHZ | HOX20000E220TF |
| | | | | | **7.1CH PREOUT PCB (CUP11703-6)** | | |
| 7.1PRE | C170 | | nsp | nsp | CERAMIC CAP. | 470PF 50V KB | CCKT1H471KB |
| 7.1PRE | C171 | | nsp | nsp | CERAMIC CAP. | 470PF 50V KB | CCKT1H471KB |
| 7.1PRE | C172 | | nsp | nsp | CERAMIC CAP. | 470PF 50V KB | CCKT1H471KB |
| 7.1PRE | C173 | | nsp | nsp | CERAMIC CAP. | 470PF 50V KB | CCKT1H471KB |
| 7.1PRE | C174 | | nsp | nsp | CERAMIC CAP. | 470PF 50V KB | CCKT1H471KB |
| 7.1PRE | C175 | | nsp | nsp | CERAMIC CAP. | 470PF 50V KB | CCKT1H471KB |

NOTE : “nsp” PARTS IS LISTED FOR REFERENCE ONLY, MARANTZ WILL NOT SUPPLY THESE PARTS.

| P.C.B. NAME | POS. NO. | VERS. COLOR | PART NO. (FOR EUR) | PART NO. (MJI) | PART NAME | DESCRIPTION | |
|---|---|---|---|---|---|---|---|
| 7.1PRE | C176 | | nsp | nsp | CERAMIC CAP. | 470PF 50V KB | CCKT1H471KB |
| 7.1PRE | C177 | | nsp | nsp | CERAMIC CAP. | 470PF 50V KB | CCKT1H471KB |
| 7.1PRE | CN22 | | nsp | nsp | JACK | | KJP15GA19ZM |
| 7.1PRE | JK15 | | 90M-YT004040R | 90M-YT004040R | TERMINAL | RCA-401DA-28 | CJJ4P051Z |
| 7.1PRE | JK16 | | 90M-YT004050R | 90M-YT004050R | TERMINAL | RCA-401DA-16 | CJJ4P052Z |
| | | | | | **ENCORDER PCB (CUP11703-2)** | | |
| ENCORD | C841 | | nsp | nsp | CERAMIC CAP. | 0.1UF 50V Z | HCBS1H104ZFT |
| ENCORD | C871 | | nsp | nsp | CERAMIC CAP. | 100PF 50V K | HCBS1H101KBT |
| ENCORD | C872 | | nsp | nsp | CERAMIC CAP. | 100PF 50V K | HCBS1H101KBT |
| ENCORD | C873 | | nsp | nsp | CERAMIC CAP. | 100PF 50V K | HCBS1H101KBT |
| ENCORD | CN86 | | nsp | nsp | JACK | DIP SOCKET | KJP07GB144ZP |
| ENCORD | D801 | | 90M-HI101040R | 90M-HI101040R | L.E.D. | SLR342VCTB7T089 | HVD342VCTB7T089 |
| ENCORD | EN82 | | 90M-SR000270R | 90M-SR000270R | ROTARY SWITCH | EC16B12S0AD4ZZZ | HSR2A032Z |
| ENCORD | J825 | | nsp | nsp | CONNECTIVE CORD | SN95/PB5 , 0.6 | C3A206 |
| ENCORD | J840 | | nsp | nsp | CONNECTIVE CORD | SN95/PB5 , 0.6 | C3A206 |
| ENCORD | JW13 | | nsp | nsp | CONNECTIVE CORD | | CWE8102150RV |
| ENCORD | Q802 | | 00MBA10004000 | 00MBA10004000 | TRANSISTOR | KRA111M | HVTKRA111MT |
| ENCORD | R871 | | nsp | nsp | RESISTOR | 10K OHM 1/5W J | CRD20TJ103T |
| ENCORD | R872 | | nsp | nsp | RESISTOR | 10K OHM 1/5W J | CRD20TJ103T |
| ENCORD | R873 | | nsp | nsp | RESISTOR | 10K OHM 1/5W J | CRD20TJ103T |
| ENCORD | R874 | | nsp | nsp | RESISTOR | 10K OHM 1/5W J | CRD20TJ103T |
| ENCORD | R875 | | nsp | nsp | RESISTOR | 680 OHM 1/5W J | CRD20TJ681T |
| ENCORD | R876 | | nsp | nsp | RESISTOR | 820 OHM 1/5W J | CRD20TJ821T |
| ENCORD | R877 | | nsp | nsp | RESISTOR | 560 OHM 1/5W J | CRD20TJ561T |
| ENCORD | R879 | | nsp | nsp | RESISTOR | 680 OHM 1/5W J | CRD20TJ681T |
| ENCORD | SW94 | | 90M-SP001210R | 90M-SP001210R | SWITCH | 00802-0005 | CST1A012ZT |
| ENCORD | SW95 | | 90M-SP001210R | 90M-SP001210R | SWITCH | 00802-0005 | CST1A012ZT |
| | | | | | **FRONT PCB (CUP11703Z)** | | |
| FRONT | BK11 | | nsp | nsp | BRACKET | | CMD1A468 |
| FRONT | BK12 | | nsp | nsp | BRACKET | | CMD1A468 |
| FRONT | BN11 | | nsp | nsp | CONNECTIVE CORD | | CWB1B907230EN |
| FRONT | BN12 | | nsp | nsp | CONNECTIVE CORD | | CWB1B905340EN |
| FRONT | BN14 | | nsp | nsp | CONNECTIVE CORD | | CWB1B907370EN |
| FRONT | C801 | | nsp | 00MOA10701020 | ELECT CAP. | 100UF 10V | HCEA1AH101T |
| FRONT | C802 | | nsp | 00MOA10601620 | ELECT CAP. | 10UF 16V | HCEA1CH100T |
| FRONT | C804 | | nsp | nsp | CERAMIC CAP. | 0.01UF 50V Z | HCBS1H103ZFT |
| FRONT | C805 | | nsp | nsp | CERAMIC CAP. | 100PF 50V K | HCBS1H101KBT |
| FRONT | C806 | | nsp | 00MOA10703520 | ELECT CAP. | 100UF 35V | HCEA1VH101T |
| FRONT | C807 | | nsp | nsp | CERAMIC CAP. | 100PF 50V K | HCBS1H101KBT |
| FRONT | C809 | | nsp | nsp | CERAMIC CAP. | 100PF 50V K | HCBS1H101KBT |
| FRONT | C810 | | nsp | nsp | CERAMIC CAP. | 100PF 50V K | HCBS1H101KBT |
| FRONT | C811 | | nsp | nsp | CERAMIC CAP. | 100PF 50V K | HCBS1H101KBT |
| FRONT | C812 | | nsp | nsp | CERAMIC CAP. | 0.1UF 50V Z | HCBS1H104ZFT |
| FRONT | C813 | | nsp | 00MOA10701020 | ELECT CAP. | 100UF 10V | HCEA1AH101T |
| FRONT | C814 | | nsp | nsp | CERAMIC CAP. | 100PF 50V K | HCBS1H101KBT |
| FRONT | C815 | | nsp | nsp | CERAMIC CAP. | 100PF 50V K | HCBS1H101KBT |
| FRONT | C816 | | nsp | nsp | CERAMIC CAP. | 100PF 50V K | HCBS1H101KBT |
| FRONT | C817 | | nsp | nsp | CERAMIC CAP. | 100PF 50V K | HCBS1H101KBT |
| FRONT | C818 | | nsp | nsp | CERAMIC CAP. | 100PF 50V K | HCBS1H101KBT |
| FRONT | C820 | | nsp | nsp | CERAMIC CAP. | 100PF 50V K | HCBS1H101KBT |
| FRONT | C821 | | nsp | 00MOA10605020 | ELECT CAP. | UF10 50V KS | HCEA1HKS100T |
| FRONT | C822 | | nsp | nsp | CERAMIC CAP. | 100PF 50V K | HCBS1H101KBT |
| FRONT | C824 | | nsp | nsp | CERAMIC CAP. | 0.1UF 50V Z | HCBS1H104ZFT |
| FRONT | C825 | | nsp | nsp | CERAMIC CAP. | 390PF 50V K | HCBS1H391KBT |
| FRONT | C826 | | nsp | nsp | CERAMIC CAP. | 100PF 50V K | HCBS1H101KBT |
| FRONT | C827 | | nsp | nsp | CERAMIC CAP. | 100PF 50V K | HCBS1H101KBT |
| FRONT | C828 | | nsp | 00MOA10701020 | ELECT CAP. | 100UF 10V | HCEA1AKS101T |
| FRONT | C829 | | nsp | 00MOA10601620 | ELECT CAP. | 10UF 16V | HCEA1CH100T |
| FRONT | C830 | | nsp | 00MOA10601620 | ELECT CAP. | 10UF 16V | HCEA1CH100T |
| FRONT | C831 | | nsp | 00MOA10601620 | ELECT CAP. | 10UF 16V | HCEA1CH100T |
| FRONT | C832 | | nsp | 00MOA10601620 | ELECT CAP. | 10UF 16V | HCEA1CH100T |
| FRONT | C833 | | nsp | nsp | CERAMIC CAP. | 0.1UF 50V Z | HCBS1H104ZFT |
| FRONT | C834 | | nsp | nsp | CERAMIC CAP. | 47PF 50V J | HCBS1H470JT |
| FRONT | C835 | | nsp | nsp | CERAMIC CAP. | 47PF 50V J | HCBS1H470JT |
| FRONT | C836 | | nsp | nsp | CERAMIC CAP. | 0.1UF 50V Z | HCBS1H104ZFT |
| FRONT | C837 | | nsp | nsp | CERAMIC CAP. | 1000PF 50V B | HCBS1H102KBT |
| FRONT | C838 | | nsp | nsp | CERAMIC CAP. | 1000PF 50V B | HCBS1H102KBT |
| FRONT | C840 | | nsp | nsp | CERAMIC CAP. | 0.1UF 50V Z | HCBS1H104ZFT |

NOTE : “nsp” PARTS IS LISTED FOR REFERENCE ONLY, MARANTZ WILL NOT SUPPLY THESE PARTS.

| P.C.B. NAME | POS. NO. | VERS. COLOR | PART NO. (FOR EUR) | PART NO. (MJI) | PART NAME | DESCRIPTION | DESCRIPTION |
|---|---|---|---|---|---|---|---|
| FRONT | C891 | | nsp | nsp | CERAMIC CAP. | 0.1UF 50V Z | HCBS1H104ZFT |
| FRONT | CN15 | | nsp | nsp | JACK | GF102-16S-TS | KJP16GA117ZG |
| FRONT | CN81 | | nsp | nsp | JACK | PIN HEADER | KJP07GB145ZP |
| FRONT | EN81 | | 90M-SR000240R | 90M-SR000240R | ROTARY SWITCH | EC16B243040HB | HSR2A004Z |
| FRONT | FIP1 | | 90M-HQ300620R | 90M-HQ300620R | DISPLAY | 16-BT-110GNK | HFL16BT110GNK |
| FRONT | IC81 | | 00MHC10220090 | 00MHC10220090 | IC | | HVINJU3430F |
| FRONT | IC83 | | 00MHC10053090 | 00MHC10053090 | IC | NJM2068DD | HVINJM2068DD |
| FRONT | J109 | | nsp | nsp | CONNECTIVE CORD | SN95/PB5 , 0.6 | C3A206 |
| FRONT | J110 | | nsp | nsp | CONNECTIVE CORD | SN95/PB5 , 0.6 | C3A206 |
| FRONT | J111 | | nsp | nsp | CONNECTIVE CORD | SN95/PB5 , 0.6 | C3A206 |
| FRONT | J112 | | nsp | nsp | CONNECTIVE CORD | SN95/PB5 , 0.6 | C3A206 |
| FRONT | J113 | | nsp | nsp | CONNECTIVE CORD | SN95/PB5 , 0.6 | C3A206 |
| FRONT | J114 | | nsp | nsp | CONNECTIVE CORD | SN95/PB5 , 0.6 | C3A206 |
| FRONT | J200 | | nsp | nsp | CONNECTIVE CORD | SN95/PB5 , 0.6 | C3A206 |
| FRONT | J207 | | nsp | nsp | CONNECTIVE CORD | SN95/PB5 , 0.6 | C3A206 |
| FRONT | J801 | | nsp | nsp | CONNECTIVE CORD | SN95/PB5 , 0.6 | C3A206 |
| FRONT | J802 | | nsp | nsp | CONNECTIVE CORD | SN95/PB5 , 0.6 | C3A206 |
| FRONT | J803 | | nsp | nsp | CONNECTIVE CORD | SN95/PB5 , 0.6 | C3A206 |
| FRONT | J804 | | nsp | nsp | CONNECTIVE CORD | SN95/PB5 , 0.6 | C3A206 |
| FRONT | J805 | | nsp | nsp | CONNECTIVE CORD | SN95/PB5 , 0.6 | C3A206 |
| FRONT | J806 | | nsp | nsp | CONNECTIVE CORD | SN95/PB5 , 0.6 | C3A206 |
| FRONT | J807 | | nsp | nsp | CONNECTIVE CORD | SN95/PB5 , 0.6 | C3A206 |
| FRONT | J808 | | nsp | nsp | CONNECTIVE CORD | SN95/PB5 , 0.6 | C3A206 |
| FRONT | J809 | | nsp | nsp | CONNECTIVE CORD | SN95/PB5 , 0.6 | C3A206 |
| FRONT | J810 | | nsp | nsp | CONNECTIVE CORD | SN95/PB5 , 0.6 | C3A206 |
| FRONT | J817 | | nsp | nsp | CONNECTIVE CORD | SN95/PB5 , 0.6 | C3A206 |
| FRONT | J818 | | nsp | nsp | CONNECTIVE CORD | SN95/PB5 , 0.6 | C3A206 |
| FRONT | J819 | | nsp | nsp | CONNECTIVE CORD | SN95/PB5 , 0.6 | C3A206 |
| FRONT | J850 | | nsp | nsp | CONNECTIVE CORD | SN95/PB5 , 0.6 | C3A206 |
| FRONT | J857 | | nsp | nsp | CONNECTIVE CORD | SN95/PB5 , 0.6 | C3A206 |
| FRONT | JK83 | | 90M-YT003240R | 90M-YT003240R | TERMINAL | S-VIDEO | CJJ9M004Z |
| FRONT | JK84 | | 90M-YT003220R | 90M-YT003220R | TERMINAL | ADVR-7100 | CJJ4S028Z |
| FRONT | JW11 | | nsp | nsp | CONNECTIVE CORD | | CWE8102150RV |
| FRONT | Q801 | | 00MBA10004000 | 00MBA10004000 | TRANSISTOR | KRA111M | HVTKRA111MT |
| FRONT | Q803 | | 00MHT30001000 | 00MHT30001000 | TRANSISTOR | | HVTKTC3199YT |
| FRONT | R805 | | nsp | nsp | RESISTOR | 100 OHM 1/5W J | CRD20TJ101T |
| FRONT | R806 | | nsp | nsp | RESISTOR | 10K OHM 1/5W J | CRD20TJ103T |
| FRONT | R807 | | nsp | nsp | RESISTOR | 10K OHM 1/5W J | CRD20TJ103T |
| FRONT | R808 | | nsp | nsp | RESISTOR | 10K OHM 1/5W J | CRD20TJ103T |
| FRONT | R809 | | nsp | nsp | RESISTOR | 10K OHM 1/5W J | CRD20TJ103T |
| FRONT | R810 | | nsp | nsp | RESISTOR | 5.6K OHM 1/5W J | CRD20TJ562T |
| FRONT | R811 | | nsp | nsp | RESISTOR | 2.7K OHM 1/5W J | CRD20TJ272T |
| FRONT | R812 | | nsp | nsp | RESISTOR | 2.2K OHM 1/5W J | CRD20TJ222T |
| FRONT | R813 | | nsp | nsp | RESISTOR | 1.5K OHM 1/5W J | CRD20TJ152T |
| FRONT | R814 | | nsp | nsp | RESISTOR | 1K OHM 1/5W J | CRD20TJ102T |
| FRONT | R815 | | nsp | nsp | RESISTOR | 820 OHM 1/5W J | CRD20TJ821T |
| FRONT | R816 | | nsp | nsp | RESISTOR | 560 OHM 1/5W J | CRD20TJ561T |
| FRONT | R817 | | nsp | nsp | RESISTOR | 680 OHM 1/5W J | CRD20TJ681T |
| FRONT | R818 | | nsp | nsp | RESISTOR | 5.6K OHM 1/5W J | CRD20TJ562T |
| FRONT | R819 | | nsp | nsp | RESISTOR | 2.7K OHM 1/5W J | CRD20TJ272T |
| FRONT | R820 | | nsp | nsp | RESISTOR | 2.2K OHM 1/5W J | CRD20TJ222T |
| FRONT | R821 | | nsp | nsp | RESISTOR | 1.5K OHM 1/5W J | CRD20TJ152T |
| FRONT | R822 | | nsp | nsp | RESISTOR | 1K OHM 1/5W J | CRD20TJ102T |
| FRONT | R823 | | nsp | nsp | RESISTOR | 820 OHM 1/5W J | CRD20TJ821T |
| FRONT | R824 | | nsp | nsp | RESISTOR | 560 OHM 1/5W J | CRD20TJ561T |
| FRONT | R825 | | nsp | nsp | RESISTOR | 680 OHM 1/5W J | CRD20TJ681T |
| FRONT | R826 | | nsp | nsp | RESISTOR | 5.6K OHM 1/5W J | CRD20TJ562T |
| FRONT | R827 | | nsp | nsp | RESISTOR | 2.7K OHM 1/5W J | CRD20TJ272T |
| FRONT | R828 | | nsp | nsp | RESISTOR | 2.2K OHM 1/5W J | CRD20TJ222T |
| FRONT | R829 | | nsp | nsp | RESISTOR | 1.5K OHM 1/5W J | CRD20TJ152T |
| FRONT | R830 | | nsp | nsp | RESISTOR | 1K OHM 1/5W J | CRD20TJ102T |
| FRONT | R831 | | nsp | nsp | RESISTOR | 10K OHM 1/5W J | CRD20TJ103T |
| FRONT | R833 | | nsp | nsp | RESISTOR | 68K OHM 1/5W J | CRD20TJ683T |
| FRONT | R834 | | nsp | nsp | RESISTOR | 47K OHM 1/5W J | CRD20TJ473T |
| FRONT | R835 | | nsp | nsp | RESISTOR | 47K OHM 1/5W J | CRD20TJ473T |
| FRONT | R836 | | nsp | nsp | RESISTOR | 47K OHM 1/5W J | CRD20TJ473T |
| FRONT | R837 | | nsp | nsp | RESISTOR | 47K OHM 1/5W J | CRD20TJ473T |
| FRONT | R838 | | nsp | nsp | RESISTOR | 100 OHM 1/5W J | CRD20TJ101T |

NOTE : “nsp” PARTS IS LISTED FOR REFERENCE ONLY, MARANTZ WILL NOT SUPPLY THESE PARTS.

| P.C.B. NAME | POS. NO. | VERS. COLOR | PART NO. (FOR EUR) | PART NO. (MJI) | PART NAME | DESCRIPTION | |
|---|---|---|---|---|---|---|---|
| FRONT | R839 | | nsp | nsp | RESISTOR | 100 OHM 1/5W J | CRD20TJ101T |
| FRONT | R841 | | nsp | nsp | RESISTOR | 75 OHM 1/5W J | CRD20TJ750T |
| FRONT | R843 | | nsp | nsp | RESISTOR | 75 OHM 1/5W J | CRD20TJ750T |
| FRONT | R844 | | nsp | nsp | RESISTOR | 75 OHM 1/5W J | CRD20TJ750T |
| FRONT | R845 | | nsp | nsp | RESISTOR | 100 OHM 1/5W J | CRD20TJ101T |
| FRONT | R901 | | nsp | nsp | RESISTOR | 10K OHM 1/5W J | CRD20TJ103T |
| FRONT | R902 | | nsp | nsp | RESISTOR | 10K OHM 1/5W J | CRD20TJ103T |
| FRONT | R903 | | nsp | nsp | RESISTOR | 10K OHM 1/5W J | CRD20TJ103T |
| FRONT | R904 | | nsp | nsp | RESISTOR | 10K OHM 1/5W J | CRD20TJ103T |
| FRONT | R905 | | nsp | nsp | RESISTOR | 10K OHM 1/5W J | CRD20TJ103T |
| FRONT | R906 | | nsp | nsp | RESISTOR | 10K OHM 1/5W J | CRD20TJ103T |
| FRONT | R907 | | nsp | nsp | RESISTOR | 10K OHM 1/5W J | CRD20TJ103T |
| FRONT | R908 | | nsp | nsp | RESISTOR | 10K OHM 1/5W J | CRD20TJ103T |
| FRONT | R909 | | nsp | nsp | RESISTOR | 10K OHM 1/5W J | CRD20TJ103T |
| FRONT | R910 | | nsp | nsp | RESISTOR | 10K OHM 1/5W J | CRD20TJ103T |
| FRONT | R911 | | nsp | nsp | RESISTOR | 10K OHM 1/5W J | CRD20TJ103T |
| FRONT | R912 | | nsp | nsp | RESISTOR | 10K OHM 1/5W J | CRD20TJ103T |
| FRONT | R913 | | nsp | nsp | RESISTOR | 10K OHM 1/5W J | CRD20TJ103T |
| FRONT | R914 | | nsp | nsp | RESISTOR | 10K OHM 1/5W J | CRD20TJ103T |
| FRONT | R915 | | nsp | nsp | RESISTOR | 10K OHM 1/5W J | CRD20TJ103T |
| FRONT | R916 | | nsp | nsp | RESISTOR | 10K OHM 1/5W J | CRD20TJ103T |
| FRONT | R917 | | nsp | nsp | RESISTOR | 47K OHM 1/5W J | CRD20TJ473T |
| FRONT | R918 | | nsp | nsp | RESISTOR | 47K OHM 1/5W J | CRD20TJ473T |
| FRONT | R919 | | nsp | nsp | RESISTOR | 47K OHM 1/5W J | CRD20TJ473T |
| FRONT | R920 | | nsp | nsp | RESISTOR | 47K OHM 1/5W J | CRD20TJ473T |
| FRONT | R921 | | nsp | nsp | RESISTOR | 47K OHM 1/5W J | CRD20TJ473T |
| FRONT | R922 | | nsp | nsp | RESISTOR | 47K OHM 1/5W J | CRD20TJ473T |
| FRONT | R923 | | nsp | nsp | RESISTOR | 47K OHM 1/5W J | CRD20TJ473T |
| FRONT | R924 | | nsp | nsp | RESISTOR | 47K OHM 1/5W J | CRD20TJ473T |
| FRONT | R925 | | nsp | nsp | RESISTOR | 47K OHM 1/5W J | CRD20TJ473T |
| FRONT | R926 | | nsp | nsp | RESISTOR | 47K OHM 1/5W J | CRD20TJ473T |
| FRONT | R927 | | nsp | nsp | RESISTOR | 47K OHM 1/5W J | CRD20TJ473T |
| FRONT | R928 | | nsp | nsp | RESISTOR | 47K OHM 1/5W J | CRD20TJ473T |
| FRONT | R929 | | nsp | nsp | RESISTOR | 47K OHM 1/5W J | CRD20TJ473T |
| FRONT | R930 | | nsp | nsp | RESISTOR | 47K OHM 1/5W J | CRD20TJ473T |
| FRONT | R931 | | nsp | nsp | RESISTOR | 47K OHM 1/5W J | CRD20TJ473T |
| FRONT | R932 | | nsp | nsp | RESISTOR | 47K OHM 1/5W J | CRD20TJ473T |
| FRONT | R933 | | nsp | nsp | RESISTOR | 47K OHM 1/5W J | CRD20TJ473T |
| FRONT | R934 | | nsp | nsp | RESISTOR | 47K OHM 1/5W J | CRD20TJ473T |
| FRONT | R935 | | nsp | nsp | RESISTOR | 47K OHM 1/5W J | CRD20TJ473T |
| FRONT | R936 | | nsp | nsp | RESISTOR | 47K OHM 1/5W J | CRD20TJ473T |
| FRONT | R937 | | nsp | nsp | RESISTOR | 47K OHM 1/5W J | CRD20TJ473T |
| FRONT | R938 | | nsp | nsp | RESISTOR | 47K OHM 1/5W J | CRD20TJ473T |
| FRONT | R939 | | nsp | nsp | RESISTOR | 47K OHM 1/5W J | CRD20TJ473T |
| FRONT | R940 | | nsp | nsp | RESISTOR | 47K OHM 1/5W J | CRD20TJ473T |
| FRONT | R941 | | nsp | nsp | RESISTOR | 47K OHM 1/5W J | CRD20TJ473T |
| FRONT | R942 | | nsp | nsp | RESISTOR | 47K OHM 1/5W J | CRD20TJ473T |
| FRONT | R943 | | nsp | nsp | RESISTOR | 47K OHM 1/5W J | CRD20TJ473T |
| FRONT | R944 | | nsp | nsp | RESISTOR | 47K OHM 1/5W J | CRD20TJ473T |
| FRONT | R945 | | nsp | nsp | RESISTOR | 47K OHM 1/5W J | CRD20TJ473T |
| FRONT | R946 | | nsp | nsp | RESISTOR | 47K OHM 1/5W J | CRD20TJ473T |
| FRONT | R947 | | nsp | nsp | RESISTOR | 47K OHM 1/5W J | CRD20TJ473T |
| FRONT | R948 | | nsp | nsp | RESISTOR | 47K OHM 1/5W J | CRD20TJ473T |
| FRONT | R949 | | nsp | nsp | RESISTOR | 47K OHM 1/5W J | CRD20TJ473T |
| FRONT | R950 | | nsp | nsp | RESISTOR | 47K OHM 1/5W J | CRD20TJ473T |
| FRONT | R951 | | nsp | nsp | RESISTOR | 47K OHM 1/5W J | CRD20TJ473T |
| FRONT | R952 | | nsp | nsp | RESISTOR | 47K OHM 1/5W J | CRD20TJ473T |
| FRONT | R953 | | nsp | nsp | RESISTOR | 47K OHM 1/5W J | CRD20TJ473T |
| FRONT | RC81 | | 90M-HW100650R | 90M-HW100650R | PHOTO UNIT | RPM6936-H4 | HRVRPM6936H4 |
| FRONT | SW71 | | 90M-SP001210R | 90M-SP001210R | SWITCH | 00802-0005 | CST1A012ZT |
| FRONT | SW72 | | 90M-SP001210R | 90M-SP001210R | SWITCH | 00802-0005 | CST1A012ZT |
| FRONT | SW73 | | 90M-SP001210R | 90M-SP001210R | SWITCH | 00802-0005 | CST1A012ZT |
| FRONT | SW74 | | 90M-SP001210R | 90M-SP001210R | SWITCH | 00802-0005 | CST1A012ZT |
| FRONT | SW77 | | 90M-SP001210R | 90M-SP001210R | SWITCH | 00802-0005 | CST1A012ZT |
| FRONT | SW78 | | 90M-SP001210R | 90M-SP001210R | SWITCH | 00802-0005 | CST1A012ZT |
| FRONT | SW79 | | 90M-SP001210R | 90M-SP001210R | SWITCH | 00802-0005 | CST1A012ZT |
| FRONT | SW80 | | 90M-SP001210R | 90M-SP001210R | SWITCH | 00802-0005 | CST1A012ZT |
| FRONT | SW81 | | 90M-SP001210R | 90M-SP001210R | SWITCH | 00802-0005 | CST1A012ZT |

NOTE : “nsp” PARTS IS LISTED FOR REFERENCE ONLY, MARANTZ WILL NOT SUPPLY THESE PARTS.

| P.C.B. NAME | POS. NO. | VERS. COLOR | PART NO. (FOR EUR) | PART NO. (MJI) | PART NAME | DESCRIPTION | |
|---|---|---|---|---|---|---|---|
| FRONT | SW82 | | 90M-SP001210R | 90M-SP001210R | SWITCH | 00802-0005 | CST1A012ZT |
| FRONT | SW83 | | 90M-SP001210R | 90M-SP001210R | SWITCH | 00802-0005 | CST1A012ZT |
| FRONT | SW84 | | 90M-SP001210R | 90M-SP001210R | SWITCH | 00802-0005 | CST1A012ZT |
| FRONT | SW86 | | 90M-SP001210R | 90M-SP001210R | SWITCH | 00802-0005 | CST1A012ZT |
| FRONT | SW87 | | 90M-SP001210R | 90M-SP001210R | SWITCH | 00802-0005 | CST1A012ZT |
| FRONT | SW88 | | 90M-SP001210R | 90M-SP001210R | SWITCH | 00802-0005 | CST1A012ZT |
| FRONT | SW89 | | 90M-SP001210R | 90M-SP001210R | SWITCH | 00802-0005 | CST1A012ZT |
| FRONT | SW90 | | 90M-SP001210R | 90M-SP001210R | SWITCH | 00802-0005 | CST1A012ZT |
| FRONT | SW91 | | 90M-SP001210R | 90M-SP001210R | SWITCH | 00802-0005 | CST1A012ZT |
| FRONT | SW92 | | 90M-SP001210R | 90M-SP001210R | SWITCH | 00802-0005 | CST1A012ZT |
| | | | | | **H/P PCB (CUP11703-4)** | | |
| H/P | BN17 | | nsp | nsp | CONNECTIVE CORD | | CWB1C905370EN |
| H/P | C874 | | nsp | nsp | CERAMIC CAP. | 100PF 50V KB | CCKT1H101KB |
| H/P | C875 | | nsp | nsp | CERAMIC CAP. | 100PF 50V KB | CCKT1H101KB |
| H/P | C876 | | nsp | nsp | CERAMIC CAP. | 0.1UF 50V Z | HCBS1H104ZFT |
| H/P | JK81 | | 90M-YT003160R | 90M-YT003160R | TERMINAL | | CJJ2E020Z |
| H/P | JW12 | | nsp | nsp | CONNECTIVE CORD | | CWE8102050RV |
| H/P | R846 | | nsp | nsp | RESISTOR | 4.7K OHM 1/5W J | CRD20TJ472T |
| H/P | R847 | | nsp | nsp | RESISTOR | 470 OHM 1/5W J | CRD20TJ471T |
| | | | | | **PUSH S/W PCB (CUP11703-5)** | | |
| P S/W | ▲ C877 | /L1G | 90M-DK100800R | 90M-DK100800R | CERAMIC CAP. | DKS471ME | KCKDKS471ME |
| P S/W | ▲ C877 | /N1B | 90M-DK100800R | 90M-DK100800R | CERAMIC CAP. | DKS471ME | KCKDKS471ME |
| P S/W | ▲ C877 | /N1G | 90M-DK100800R | 90M-DK100800R | CERAMIC CAP. | DKS471ME | KCKDKS471ME |
| P S/W | ▲ C877 | /N1S | 90M-DK100800R | 90M-DK100800R | CERAMIC CAP. | DKS471ME | KCKDKS471ME |
| P S/W | CN88 | /L1G | 90M-YP100250R | 90M-YP100250R | JACK | MOLEX35328-02 | KJP02GA89ZM |
| P S/W | CN88 | /N1B | 90M-YP100250R | 90M-YP100250R | JACK | MOLEX35328-02 | KJP02GA89ZM |
| P S/W | CN88 | /N1G | 90M-YP100250R | 90M-YP100250R | JACK | MOLEX35328-02 | KJP02GA89ZM |
| P S/W | CN88 | /N1S | 90M-YP100250R | 90M-YP100250R | JACK | MOLEX35328-02 | KJP02GA89ZM |
| P S/W | ▲ SW97 | /L1G | 90M-SP000850R | 90M-SP000850R | SWITCH | JPP1197CSA64 | KSH1A001ZV |
| P S/W | ▲ SW97 | /N1B | 90M-SP000850R | 90M-SP000850R | SWITCH | JPP1197CSA64 | KSH1A001ZV |
| P S/W | ▲ SW97 | /N1G | 90M-SP000850R | 90M-SP000850R | SWITCH | JPP1197CSA64 | KSH1A001ZV |
| P S/W | ▲ SW97 | /N1S | 90M-SP000850R | 90M-SP000850R | SWITCH | JPP1197CSA64 | KSH1A001ZV |
| | | | | | **STANDBY PCB (CUP11703-3)** | | |
| STANDBY | BK81 | | nsp | nsp | BRACKET | | CMD1A387 |
| STANDBY | BK82 | | nsp | nsp | BRACKET | | CMD1A387 |
| STANDBY | C881 | | nsp | nsp | CERAMIC CAP. | 0.1UF 50V Z | HCBS1H104ZFT |
| STANDBY | C882 | | nsp | 00MOA47505020 | ELECT CAP. | 4.7UF 50V | HCEA1HH4R7T |
| STANDBY | C883 | | nsp | 00MOA10701620 | ELECT CAP. | 100UF 16V | HCEA1CH101T |
| STANDBY | C884 | | nsp | nsp | CERAMIC CAP. | 0.1UF 50V Z | HCBS1H104ZFT |
| STANDBY | C885 | | nsp | nsp | CERAMIC CAP. | 0.1UF 50V Z | HCBS1H104ZFT |
| STANDBY | C886 | | nsp | 00MOA33802520 | ELECT CAP. | 3300UF 25V | HCEA1EH332E |
| STANDBY | C887 | | nsp | nsp | CERAMIC CAP. | 1000PF 50V B | HCBS1H102KBT |
| STANDBY | ▲ C888 | | 90M-DK100810R | 90M-DK100810R | CERAMIC CAP. | DE1610-610F103M | BCKWKH103MF |
| STANDBY | CN90 | | nsp | nsp | JACK | | KJP05GB99ZM |
| STANDBY | CN91 | /L1G | 90M-YP100250R | 90M-YP100250R | JACK | MOLEX35328-02 | KJP02GA89ZM |
| STANDBY | CN91 | /N1B | 90M-YP100250R | 90M-YP100250R | JACK | MOLEX35328-02 | KJP02GA89ZM |
| STANDBY | CN91 | /N1G | 90M-YP100250R | 90M-YP100250R | JACK | MOLEX35328-02 | KJP02GA89ZM |
| STANDBY | CN91 | /N1S | 90M-YP100250R | 90M-YP100250R | JACK | MOLEX35328-02 | KJP02GA89ZM |
| STANDBY | CN92 | /L1G | 00MYP04000760 | 00MYP04000760 | JACK | 7.92MM(YUNHO) | KJP02KA060ZY |
| STANDBY | CN92 | /N1B | 90M-YP100250R | 90M-YP100250R | JACK | MOLEX35328-02 | KJP02GA89ZM |
| STANDBY | CN92 | /N1G | 90M-YP100250R | 90M-YP100250R | JACK | MOLEX35328-02 | KJP02GA89ZM |
| STANDBY | CN92 | /N1S | 90M-YP100250R | 90M-YP100250R | JACK | MOLEX35328-02 | KJP02GA89ZM |
| STANDBY | CN92 | /U1B | 00MYP04000760 | 00MYP04000760 | JACK | 7.92MM(YUNHO) | KJP02KA060ZY |
| STANDBY | CN93 | | 90M-YP100250R | 90M-YP100250R | JACK | MOLEX35328-02 | KJP02GA89ZM |
| STANDBY | D802 | | nsp | 00MHD20015210 | DIODE | 1SS133T-77 | HVD1SS133MT |
| STANDBY | D803 | | nsp | nsp | CONNECTIVE CORD | SN95/PB5 , 0.6 | C3A206 |
| STANDBY | D804 | | nsp | 90M-HD201750R | DIODE | 1N4003 | KVD1N4003SRT |
| STANDBY | D805 | | nsp | nsp | CONNECTIVE CORD | SN95/PB5 , 0.6 | C3A206 |
| STANDBY | D806 | | 00MHD30821000 | 00MHD30821000 | ZENER DIODE | 8.2V 1/2W | HVDMTZJ8.2BT |
| STANDBY | D807 | | nsp | 90M-HD201750R | DIODE | 1N4003 | KVD1N4003SRT |
| STANDBY | D808 | | nsp | 90M-HD201750R | DIODE | 1N4003 | KVD1N4003SRT |
| STANDBY | D809 | | nsp | 90M-HD201750R | DIODE | 1N4003 | KVD1N4003SRT |
| STANDBY | D810 | | nsp | 90M-HD201750R | DIODE | 1N4003 | KVD1N4003SRT |
| STANDBY | D811 | | nsp | 90M-HD201750R | DIODE | 1N4003 | KVD1N4003SRT |
| STANDBY | D812 | | nsp | 90M-HD201750R | DIODE | 1N4003 | KVD1N4003SRT |
| STANDBY | D813 | | nsp | 90M-HD201750R | DIODE | 1N4003 | KVD1N4003SRT |
| STANDBY | F801 | | nsp | nsp | FUSE HOLDER | | KJCFC5S |
| STANDBY | ▲ F802 | /L1G | 90M-FS001070R | 90M-FS001070R | FUSE | | KBA2D2500TLET |

NOTE : “nsp” PARTS IS LISTED FOR REFERENCE ONLY, MARANTZ WILL NOT SUPPLY THESE PARTS.

| P.C.B. NAME | POS. NO. | VERS. COLOR | PART NO. (FOR EUR) | PART NO. (MJI) | PART NAME | DESCRIPTION | |
|---|---|---|---|---|---|---|---|
| STANDBY | ▲ F802 | /U1B | 90M-FS001070R | 90M-FS001070R | FUSE | | KBA2D2500TLET |
| STANDBY | ▲ F803 | | 90M-FS001070R | 90M-FS001070R | FUSE | | KBA2D2500TLET |
| STANDBY | IC84 | | 90M-HC108410R | 90M-HC108410R | IC | S-80842CNY-X | HVIS-80842CNY-X |
| STANDBY | IC85 | | 90M-HC300500R | 90M-HC300500R | IC REG | KA7805-ABTU | HVIMC7805C |
| STANDBY | J828 | | nsp | nsp | CONNECTIVE CORD | SN95/PB5 , 0.6 | C3A206 |
| STANDBY | J829 | | nsp | nsp | CONNECTIVE CORD | SN95/PB5 , 0.6 | C3A206 |
| STANDBY | J830 | | nsp | nsp | CONNECTIVE CORD | SN95/PB5 , 0.6 | C3A206 |
| STANDBY | J831 | /U1B | nsp | nsp | CONNECTIVE CORD | SN95/PB5 , 0.6 | C3A206 |
| STANDBY | J834 | | nsp | nsp | CONNECTIVE CORD | SN95/PB5 , 0.6 | C3A206 |
| STANDBY | J889 | /N1B | nsp | nsp | CONNECTIVE CORD | SN95/PB5 , 0.6 | C3A206 |
| STANDBY | J889 | /N1G | nsp | nsp | CONNECTIVE CORD | SN95/PB5 , 0.6 | C3A206 |
| STANDBY | J889 | /N1S | nsp | nsp | CONNECTIVE CORD | SN95/PB5 , 0.6 | C3A206 |
| STANDBY | JK85 | /L1G | 90M-YT002410R | 90M-YT002410R | OUTLET | A204D0041P | KJJ7A015Z |
| STANDBY | JK85 | /U1B | 90M-YT002410R | 90M-YT002410R | OUTLET | A204D0041P | KJJ7A015Z |
| STANDBY | JK86 | /N1B | 90M-YT002430R | 90M-YT002430R | OUTLET | A302D0061P | KJJ7A022Z |
| STANDBY | JK86 | /N1G | 90M-YT002430R | 90M-YT002430R | OUTLET | A302D0061P | KJJ7A022Z |
| STANDBY | JK86 | /N1S | 90M-YT002430R | 90M-YT002430R | OUTLET | A302D0061P | KJJ7A022Z |
| STANDBY | L801 | | 00MLY10090010 | 00MLY10090010 | RELAY | SDT-S-109DMR | HSL1D016ZE |
| STANDBY | Q804 | | 00MBA20004000 | 00MBA20004000 | TRANSISTOR | KRC111M | HVTKRC111MT |
| STANDBY | Q805 | | 90M-HT600040R | 90M-HT600040R | TRANSISTOR | | HVTKTA1267YT |
| STANDBY | R881 | | nsp | nsp | RESISTOR | 47K OHM 1/5W J | CRD20TJ473T |
| STANDBY | R882 | | nsp | nsp | RESISTOR | 10K OHM 1/5W J | CRD20TJ103T |
| STANDBY | R883 | | nsp | nsp | RESISTOR | 2.2K OHM 1/5W J | CRD20TJ222T |
| STANDBY | R885 | | nsp | nsp | RESISTOR | 1 OHM 1/5W J | CRD20TJ1R0T |
| STANDBY | ▲ R886 | /U1B | 90M-GG000010R | 90M-GG000010R | RESISTOR | 3.3M OHM 1/2W | BRDERC12UGK335T |
| STANDBY | R887 | | nsp | nsp | RESISTOR | 4.7K OHM 1/5W J | CRD20TJ472T |
| STANDBY | R888 | | nsp | nsp | RESISTOR | 10K OHM 1/5W J | CRD20TJ103T |
| STANDBY | ▲ T801 | /L1G | 90M-TS001960R | 90M-TS001960R | MAINS TRANSF. | PS5400(6400)/F1 | CLT5I002ZJ |
| STANDBY | ▲ T801 | /N1B | 90M-TS001940R | 90M-TS001940R | MAINS TRANSF. | SR5400(6400)/N1 | CLT5I002ZE |
| STANDBY | ▲ T801 | /N1G | 90M-TS001940R | 90M-TS001940R | MAINS TRANSF. | SR5400(6400)/N1 | CLT5I002ZE |
| STANDBY | ▲ T801 | /N1S | 90M-TS001940R | 90M-TS001940R | MAINS TRANSF. | SR5400(6400)/N1 | CLT5I002ZE |
| STANDBY | ▲ T801 | /U1B | 90M-TS001970R | 90M-TS001970R | MAINS TRANSF. | SR5400(6400)/U1 | CLT5I002ZU |
| | | | | | **TACT PCB** | | |
| TACT | J822 | /U1B | nsp | nsp | CONNECTIVE CORD | SN95/PB5 , 0.6 | C3A206 |
| TACT | J823 | /U1B | nsp | nsp | CONNECTIVE CORD | SN95/PB5 , 0.6 | C3A206 |
| TACT | SW96 | /L1G | 90M-SP001210R | 90M-SP001210R | SWITCH | 00802-0005 | CST1A012ZT |
| TACT | SW96 | /U1B | 90M-SP001210R | 90M-SP001210R | SWITCH | 00802-0005 | CST1A012ZT |
| | | | | | **INPUT PCB (CUP11705Z)** | | |
| INPUT | BN22 | | nsp | nsp | CONNECTIVE CORD | | CWB1B915280EN |
| INPUT | BN29 | | nsp | nsp | CONNECTIVE CORD | | CWB1C908450EN |
| INPUT | BN30 | | nsp | nsp | CONNECTIVE CORD | | CWB1C909130EN |
| INPUT | BN31 | | nsp | nsp | CONNECTIVE CORD | | CWB1B907120EN |
| INPUT | C100 | | nsp | 00MOA22701620 | ELECT CAP. | 220UF 16V | HCEA1CH221T |
| INPUT | C201 | | nsp | nsp | CERAMIC CAP. | 470PF 50V KB | CCKT1H471KB |
| INPUT | C202 | | nsp | nsp | CERAMIC CAP. | 470PF 50V KB | CCKT1H471KB |
| INPUT | C203 | | nsp | nsp | CERAMIC CAP. | 470PF 50V KB | CCKT1H471KB |
| INPUT | C204 | | nsp | nsp | CERAMIC CAP. | 470PF 50V KB | CCKT1H471KB |
| INPUT | C205 | | nsp | nsp | CERAMIC CAP. | 470PF 50V KB | CCKT1H471KB |
| INPUT | C206 | | nsp | nsp | CERAMIC CAP. | 470PF 50V KB | CCKT1H471KB |
| INPUT | C207 | | nsp | nsp | CERAMIC CAP. | 470PF 50V KB | CCKT1H471KB |
| INPUT | C208 | | nsp | nsp | CERAMIC CAP. | 470PF 50V KB | CCKT1H471KB |
| INPUT | C209 | | nsp | nsp | CERAMIC CAP. | 470PF 50V KB | CCKT1H471KB |
| INPUT | C210 | | nsp | nsp | CERAMIC CAP. | 470PF 50V KB | CCKT1H471KB |
| INPUT | C211 | | nsp | nsp | CERAMIC CAP. | 470PF 50V KB | CCKT1H471KB |
| INPUT | C212 | | nsp | nsp | CERAMIC CAP. | 470PF 50V KB | CCKT1H471KB |
| INPUT | C213 | | nsp | nsp | CERAMIC CAP. | 470PF 50V KB | CCKT1H471KB |
| INPUT | C214 | | nsp | nsp | CERAMIC CAP. | 470PF 50V KB | CCKT1H471KB |
| INPUT | C215 | | nsp | nsp | CERAMIC CAP. | 470PF 50V KB | CCKT1H471KB |
| INPUT | C216 | | nsp | nsp | CERAMIC CAP. | 470PF 50V KB | CCKT1H471KB |
| INPUT | C217 | | nsp | nsp | CERAMIC CAP. | 470PF 50V KB | CCKT1H471KB |
| INPUT | C218 | | nsp | nsp | CERAMIC CAP. | 470PF 50V KB | CCKT1H471KB |
| INPUT | C219 | | nsp | nsp | CERAMIC CAP. | 470PF 50V KB | CCKT1H471KB |
| INPUT | C220 | | nsp | nsp | CERAMIC CAP. | 470PF 50V KB | CCKT1H471KB |
| INPUT | C221 | | nsp | nsp | CERAMIC CAP. | 470PF 50V KB | CCKT1H471KB |
| INPUT | C222 | | nsp | nsp | CERAMIC CAP. | 470PF 50V KB | CCKT1H471KB |
| INPUT | C223 | | nsp | 00MOA10605020 | ELECT CAP. | 10UF 50V | HCEA1HH100T |
| INPUT | C224 | | nsp | 00MOA10605020 | ELECT CAP. | 10UF 50V | HCEA1HH100T |
| INPUT | C225 | | nsp | 00MOA10605020 | ELECT CAP. | 10UF 50V | HCEA1HH100T |

NOTE : “nsp” PARTS IS LISTED FOR REFERENCE ONLY, MARANTZ WILL NOT SUPPLY THESE PARTS.

| P.C.B. NAME | POS. NO. | VERS. COLOR | PART NO. (FOR EUR) | PART NO. (MJI) | PART NAME | DESCRIPTION | |
|---|---|---|---|---|---|---|---|
| INPUT | C226 | | nsp | 00MOA10605020 | ELECT CAP. | 10UF 50V | HCEA1HH100T |
| INPUT | C227 | | nsp | 00MOA10605020 | ELECT CAP. | 10UF 50V | HCEA1HH100T |
| INPUT | C228 | | nsp | 00MOA10605020 | ELECT CAP. | 10UF 50V | HCEA1HH100T |
| INPUT | C229 | | nsp | 00MOA10605020 | ELECT CAP. | 10UF 50V | HCEA1HH100T |
| INPUT | C230 | | nsp | 00MOA10605020 | ELECT CAP. | 10UF 50V | HCEA1HH100T |
| INPUT | C231 | | nsp | nsp | CERAMIC CAP. | 470PF 50V KB | CCKT1H471KB |
| INPUT | C232 | | nsp | nsp | CERAMIC CAP. | 470PF 50V KB | CCKT1H471KB |
| INPUT | C233 | | nsp | nsp | CERAMIC CAP. | 470PF 50V KB | CCKT1H471KB |
| INPUT | C234 | | nsp | nsp | CERAMIC CAP. | 470PF 50V KB | CCKT1H471KB |
| INPUT | C235 | | nsp | nsp | CERAMIC CAP. | 470PF 50V KB | CCKT1H471KB |
| INPUT | C236 | | nsp | nsp | CERAMIC CAP. | 470PF 50V KB | CCKT1H471KB |
| INPUT | C237 | | nsp | nsp | CERAMIC CAP. | 470PF 50V KB | CCKT1H471KB |
| INPUT | C238 | | nsp | 00MOA10605020 | ELECT CAP. | 10UF 50V | HCEA1HH100T |
| INPUT | C239 | | nsp | 00MOA10605020 | ELECT CAP. | 10UF 50V | HCEA1HH100T |
| INPUT | C240 | | nsp | 00MOA10605020 | ELECT CAP. | 10UF 50V | HCEA1HH100T |
| INPUT | C241 | | nsp | 00MOA10605020 | ELECT CAP. | 10UF 50V | HCEA1HH100T |
| INPUT | C242 | | nsp | 00MOA10605020 | ELECT CAP. | 10UF 50V | HCEA1HH100T |
| INPUT | C243 | | nsp | 00MOA10605020 | ELECT CAP. | 10UF 50V | HCEA1HH100T |
| INPUT | C244 | | nsp | 00MOA10605020 | ELECT CAP. | 10UF 50V | HCEA1HH100T |
| INPUT | C245 | | nsp | nsp | CERAMIC CAP. | 50V 0.1UF | CCKT1H104ZF |
| INPUT | C246 | | nsp | nsp | CERAMIC CAP. | 50V 0.1UF | CCKT1H104ZF |
| INPUT | C247 | | nsp | nsp | CERAMIC CAP. | 50V 0.1UF | CCKT1H104ZF |
| INPUT | C248 | | nsp | nsp | CERAMIC CAP. | 50V 0.1UF | CCKT1H104ZF |
| INPUT | C249 | | nsp | nsp | CERAMIC CAP. | 50V 0.1UF | CCKT1H104ZF |
| INPUT | C250 | | nsp | nsp | CERAMIC CAP. | 50V 0.1UF | CCKT1H104ZF |
| INPUT | C251 | | nsp | nsp | CERAMIC CAP. | 50V 0.1UF | CCKT1H104ZF |
| INPUT | C252 | | nsp | nsp | CERAMIC CAP. | 50V 0.1UF | CCKT1H104ZF |
| INPUT | C254 | | nsp | 00MOA10605020 | ELECT CAP. | 10UF 50V | HCEA1HH100T |
| INPUT | C256 | | nsp | 00MOA10605020 | ELECT CAP. | 10UF 50V | HCEA1HH100T |
| INPUT | C258 | | nsp | 00MOA10605020 | ELECT CAP. | 10UF 50V | HCEA1HH100T |
| INPUT | C260 | | nsp | 00MOA10605020 | ELECT CAP. | 10UF 50V | HCEA1HH100T |
| INPUT | C262 | | nsp | 00MOA10605020 | ELECT CAP. | 10UF 50V | HCEA1HH100T |
| INPUT | C264 | | nsp | 00MOA10605020 | ELECT CAP. | 10UF 50V | HCEA1HH100T |
| INPUT | C266 | | nsp | 00MOA10605020 | ELECT CAP. | 10UF 50V | HCEA1HH100T |
| INPUT | C267 | | nsp | nsp | CERAMIC CAP. | 50V 0.1UF | CCKT1H104ZF |
| INPUT | C268 | | nsp | nsp | CERAMIC CAP. | 50V 0.1UF | CCKT1H104ZF |
| INPUT | C269 | | nsp | nsp | CERAMIC CAP. | 100PF 50V KB | CCKT1H101KB |
| INPUT | C270 | | nsp | nsp | CERAMIC CAP. | 50V 0.1UF | CCKT1H104ZF |
| INPUT | C271 | | nsp | nsp | CERAMIC CAP. | 50V 0.1UF | CCKT1H104ZF |
| INPUT | C272 | | nsp | nsp | CERAMIC CAP. | 100PF 50V KB | CCKT1H101KB |
| INPUT | C273 | | nsp | nsp | CERAMIC CAP. | 50V 0.1UF | CCKT1H104ZF |
| INPUT | C274 | | nsp | nsp | CERAMIC CAP. | 50V 0.1UF | CCKT1H104ZF |
| INPUT | C275 | | nsp | nsp | CERAMIC CAP. | 50V 0.1UF | CCKT1H104ZF |
| INPUT | C276 | | nsp | nsp | CERAMIC CAP. | 50V 0.1UF | CCKT1H104ZF |
| INPUT | C281 | | nsp | 00MOA10605020 | ELECT CAP. | 10UF 50V | HCEA1HH100T |
| INPUT | C282 | | nsp | 00MOA10605020 | ELECT CAP. | 10UF 50V | HCEA1HH100T |
| INPUT | C283 | | nsp | 00MOA10605020 | ELECT CAP. | 10UF 50V | HCEA1HH100T |
| INPUT | C284 | | nsp | 00MOA10605020 | ELECT CAP. | 10UF 50V | HCEA1HH100T |
| INPUT | C285 | | nsp | 00MOA10605020 | ELECT CAP. | 10UF 50V | HCEA1HH100T |
| INPUT | C286 | | nsp | 00MOA10605020 | ELECT CAP. | 10UF 50V | HCEA1HH100T |
| INPUT | C287 | | nsp | 00MOA10605020 | ELECT CAP. | 10UF 50V | HCEA1HH100T |
| INPUT | C288 | | nsp | 00MOA10605020 | ELECT CAP. | 10UF 50V | HCEA1HH100T |
| INPUT | C289 | | nsp | nsp | CERAMIC CAP. | 50V 0.1UF | CCKT1H104ZF |
| INPUT | C290 | | nsp | nsp | CERAMIC CAP. | 50V 0.1UF | CCKT1H104ZF |
| INPUT | C291 | | nsp | nsp | CERAMIC CAP. | 100PF 50V KB | CCKT1H101KB |
| INPUT | C292 | | nsp | 00MOA22605020 | ELECT CAP. | 22UF 50V | HCEA1HH220T |
| INPUT | C293 | | nsp | 00MOA22605020 | ELECT CAP. | 22UF 50V | HCEA1HH220T |
| INPUT | C294 | | nsp | 00MOA22605020 | ELECT CAP. | 22UF 50V | HCEA1HH220T |
| INPUT | C295 | | nsp | 00MOA22605020 | ELECT CAP. | 22UF 50V | HCEA1HH220T |
| INPUT | C296 | | nsp | 00MOA22605020 | ELECT CAP. | 22UF 50V | HCEA1HH220T |
| INPUT | C297 | | nsp | 00MOA22605020 | ELECT CAP. | 22UF 50V | HCEA1HH220T |
| INPUT | C298 | | nsp | 00MOA22605020 | ELECT CAP. | 22UF 50V | HCEA1HH220T |
| INPUT | C299 | | nsp | 00MOA47602520 | ELECT CAP. | 47UF 25V | HCEA1EH470T |
| INPUT | C300 | | nsp | 00MOA47602520 | ELECT CAP. | 47UF 25V | HCEA1EH470T |
| INPUT | C301 | | nsp | 00MOA47602520 | ELECT CAP. | 47UF 25V | HCEA1EH470T |
| INPUT | C302 | | nsp | 00MOA47602520 | ELECT CAP. | 47UF 25V | HCEA1EH470T |
| INPUT | C303 | | nsp | nsp | CERAMIC CAP. | 50V 0.1UF | CCKT1H104ZF |
| INPUT | C304 | | nsp | nsp | CERAMIC CAP. | 50V 0.1UF | CCKT1H104ZF |

NOTE : “nsp” PARTS IS LISTED FOR REFERENCE ONLY, MARANTZ WILL NOT SUPPLY THESE PARTS.

| P.C.B. NAME | POS. NO. | VERS. COLOR | PART NO. (FOR EUR) | PART NO. (MJI) | PART NAME | DESCRIPTION | |
|---|---|---|---|---|---|---|---|
| INPUT | C305 | | nsp | nsp | CERAMIC CAP. | 50V 0.1UF | CCKT1H104ZF |
| INPUT | C306 | | nsp | nsp | CERAMIC CAP. | 50V 0.1UF | CCKT1H104ZF |
| INPUT | C307 | | nsp | nsp | CERAMIC CAP. | 100PF 50V KB | CCKT1H101KB |
| INPUT | C308 | | nsp | nsp | CERAMIC CAP. | 100PF 50V KB | CCKT1H101KB |
| INPUT | C309 | | nsp | nsp | CERAMIC CAP. | 50V 0.1UF | CCKT1H104ZF |
| INPUT | C310 | | nsp | nsp | CERAMIC CAP. | 50V 0.1UF | CCKT1H104ZF |
| INPUT | C311 | | nsp | nsp | CERAMIC CAP. | 50V 0.1UF | CCKT1H104ZF |
| INPUT | C312 | | nsp | nsp | CERAMIC CAP. | 50V 0.1UF | CCKT1H104ZF |
| INPUT | C313 | | nsp | nsp | CERAMIC CAP. | 50V 0.1UF | CCKT1H104ZF |
| INPUT | C314 | | nsp | nsp | CERAMIC CAP. | 50V 0.1UF | CCKT1H104ZF |
| INPUT | C315 | | nsp | nsp | CERAMIC CAP. | 50V 0.1UF | CCKT1H104ZF |
| INPUT | C316 | | nsp | nsp | CERAMIC CAP. | 50V 0.1UF | CCKT1H104ZF |
| INPUT | C317 | | nsp | nsp | CERAMIC CAP. | 100PF 50V KB | CCKT1H101KB |
| INPUT | C318 | | nsp | nsp | CERAMIC CAP. | 100PF 50V KB | CCKT1H101KB |
| INPUT | C319 | | nsp | nsp | CERAMIC CAP. | 100PF 50V KB | CCKT1H101KB |
| INPUT | C320 | | nsp | nsp | CERAMIC CAP. | 100PF 50V KB | CCKT1H101KB |
| INPUT | C321 | | nsp | nsp | CERAMIC CAP. | 100PF 50V KB | CCKT1H101KB |
| INPUT | C322 | | nsp | nsp | CERAMIC CAP. | 100PF 50V KB | CCKT1H101KB |
| INPUT | C323 | | nsp | nsp | CERAMIC CAP. | 100PF 50V KB | CCKT1H101KB |
| INPUT | C324 | | nsp | nsp | CERAMIC CAP. | 470PF 50V KB | CCKT1H471KB |
| INPUT | C325 | | nsp | nsp | CERAMIC CAP. | 470PF 50V KB | CCKT1H471KB |
| INPUT | C326 | | nsp | nsp | CERAMIC CAP. | 470PF 50V KB | CCKT1H471KB |
| INPUT | C327 | | nsp | nsp | CERAMIC CAP. | 470PF 50V KB | CCKT1H471KB |
| INPUT | C328 | | nsp | nsp | CERAMIC CAP. | 470PF 50V KB | CCKT1H471KB |
| INPUT | C329 | | nsp | 00MOA10605020 | ELECT CAP. | 10UF 50V | HCEA1HH100T |
| INPUT | C330 | | nsp | 00MOA10605020 | ELECT CAP. | 10UF 50V | HCEA1HH100T |
| INPUT | C331 | | nsp | 00MOA10605020 | ELECT CAP. | 10UF 50V | HCEA1HH100T |
| INPUT | C332 | | nsp | 00MOA10605020 | ELECT CAP. | 10UF 50V | HCEA1HH100T |
| INPUT | C333 | | nsp | 00MOA10605020 | ELECT CAP. | 10UF 50V | HCEA1HH100T |
| INPUT | C334 | | nsp | 00MOA10605020 | ELECT CAP. | 10UF 50V | HCEA1HH100T |
| INPUT | C335 | | nsp | 00MOA10605020 | ELECT CAP. | 10UF 50V | HCEA1HH100T |
| INPUT | C336 | | nsp | 00MOA22605020 | ELECT CAP. | 22UF 50V | HCEA1HH220T |
| INPUT | C337 | | nsp | 00MOA22605020 | ELECT CAP. | 22UF 50V | HCEA1HH220T |
| INPUT | C338 | | nsp | 00MOA22605020 | ELECT CAP. | 22UF 50V | HCEA1HH220T |
| INPUT | C339 | | nsp | 00MOA22605020 | ELECT CAP. | 22UF 50V | HCEA1HH220T |
| INPUT | C340 | | nsp | 00MOA22605020 | ELECT CAP. | 22UF 50V | HCEA1HH220T |
| INPUT | C341 | | nsp | 00MOA22605020 | ELECT CAP. | 22UF 50V | HCEA1HH220T |
| INPUT | C342 | | nsp | 00MOA22605020 | ELECT CAP. | 22UF 50V | HCEA1HH220T |
| INPUT | C343 | | nsp | 00MOA47602520 | ELECT CAP. | 47UF 25V | HCEA1EH470T |
| INPUT | C344 | | nsp | 00MOA47602520 | ELECT CAP. | 47UF 25V | HCEA1EH470T |
| INPUT | C345 | | nsp | 00MOA47602520 | ELECT CAP. | 47UF 25V | HCEA1EH470T |
| INPUT | C346 | | nsp | 00MOA47602520 | ELECT CAP. | 47UF 25V | HCEA1EH470T |
| INPUT | C347 | | nsp | 00MOA47602520 | ELECT CAP. | 47UF 25V | HCEA1EH470T |
| INPUT | C348 | | nsp | 00MOA47602520 | ELECT CAP. | 47UF 25V | HCEA1EH470T |
| INPUT | C349 | | nsp | 00MOA47602520 | ELECT CAP. | 47UF 25V | HCEA1EH470T |
| INPUT | C350 | | nsp | nsp | CERAMIC CAP. | 100PF 50V KB | CCKT1H101KB |
| INPUT | C351 | | nsp | nsp | CERAMIC CAP. | 100PF 50V KB | CCKT1H101KB |
| INPUT | C354 | | nsp | nsp | CERAMIC CAP. | 100PF 50V KB | CCKT1H101KB |
| INPUT | C355 | | nsp | nsp | CERAMIC CAP. | 100PF 50V KB | CCKT1H101KB |
| INPUT | C356 | | nsp | nsp | CERAMIC CAP. | 100PF 50V KB | CCKT1H101KB |
| INPUT | C357 | | nsp | nsp | CERAMIC CAP. | 100PF 50V KB | CCKT1H101KB |
| INPUT | C358 | | nsp | nsp | CERAMIC CAP. | 0.01UF 50V ZF | CCKT1H103ZF |
| INPUT | C359 | | nsp | nsp | CERAMIC CAP. | 50V 0.1UF | CCKT1H104ZF |
| INPUT | C360 | | nsp | nsp | CERAMIC CAP. | 0.01UF 50V ZF | CCKT1H103ZF |
| INPUT | C361 | | nsp | nsp | CERAMIC CAP. | 50V 0.1UF | CCKT1H104ZF |
| INPUT | C362 | | nsp | 00MOA10701620 | ELECT CAP. | 100UF 16V | HCEA1CH101T |
| INPUT | C363 | | nsp | 00MOA10701620 | ELECT CAP. | 100UF 16V | HCEA1CH101T |
| INPUT | C364 | | nsp | nsp | CERAMIC CAP. | 50V 0.1UF | CCKT1H104ZF |
| INPUT | C365 | | nsp | nsp | CERAMIC CAP. | 50V 0.1UF | CCKT1H104ZF |
| INPUT | C366 | | nsp | nsp | CERAMIC CAP. | 50V 0.1UF | CCKT1H104ZF |
| INPUT | C367 | | nsp | nsp | CERAMIC CAP. | 50V 0.1UF | CCKT1H104ZF |
| INPUT | C368 | | nsp | nsp | CERAMIC CAP. | 50V 0.1UF | CCKT1H104ZF |
| INPUT | C369 | | nsp | 00MOA10701620 | ELECT CAP. | 100UF 16V | HCEA1CH101T |
| INPUT | C370 | | nsp | 00MOA10701620 | ELECT CAP. | 100UF 16V | HCEA1CH101T |
| INPUT | C371 | | nsp | 00MOA10701620 | ELECT CAP. | 100UF 16V | HCEA1CH101T |
| INPUT | C372 | | nsp | 00MOA10701620 | ELECT CAP. | 100UF 16V | HCEA1CH101T |
| INPUT | C373 | | nsp | 00MOA10701620 | ELECT CAP. | 100UF 16V | HCEA1CH101T |
| INPUT | C374 | | nsp | nsp | CERAMIC CAP. | 470PF 50V KB | CCKT1H471KB |

NOTE : “nsp” PARTS IS LISTED FOR REFERENCE ONLY, MARANTZ WILL NOT SUPPLY THESE PARTS.

| P.C.B. NAME | POS. NO. | VERS. COLOR | PART NO. (FOR EUR) | PART NO. (MJI) | PART NAME | DESCRIPTION | |
|---|---|---|---|---|---|---|---|
| INPUT | C375 | | nsp | nsp | CERAMIC CAP. | 470PF 50V KB | CCKT1H471KB |
| INPUT | C376 | | nsp | 00MOA22605020 | ELECT CAP. | 22UF 50V | HCEA1HH220T |
| INPUT | C377 | | nsp | nsp | CERAMIC CAP. | 470PF 50V KB | CCKT1H471KB |
| INPUT | C378 | | nsp | nsp | CERAMIC CAP. | 470PF 50V KB | CCKT1H471KB |
| INPUT | C379 | | nsp | 00MOA10605020 | ELECT CAP. | 10UF 50V | HCEA1HH100T |
| INPUT | C380 | | nsp | 00MOA10605020 | ELECT CAP. | 10UF 50V | HCEA1HH100T |
| INPUT | C381 | | nsp | nsp | CERAMIC CAP. | 50V 0.1UF | CCKT1H104ZF |
| INPUT | C382 | | nsp | nsp | CERAMIC CAP. | 50V 0.1UF | CCKT1H104ZF |
| INPUT | C386 | | nsp | nsp | CERAMIC CAP. | 0.01UF 50V ZF | CCKT1H103ZF |
| INPUT | C387 | | nsp | nsp | CERAMIC CAP. | 0.01UF 50V ZF | CCKT1H103ZF |
| INPUT | C388 | | nsp | nsp | CERAMIC CAP. | 0.01UF 50V ZF | CCKT1H103ZF |
| INPUT | C389 | | nsp | nsp | CERAMIC CAP. | 0.01UF 50V ZF | CCKT1H103ZF |
| INPUT | C390 | | nsp | nsp | CERAMIC CAP. | 0.01UF 50V ZF | CCKT1H103ZF |
| INPUT | C393 | | nsp | nsp | CERAMIC CAP. | 50V 0.1UF | CCKT1H104ZF |
| INPUT | C394 | | nsp | 00MOA10701620 | ELECT CAP. | 100UF 16V | HCEA1CH101T |
| INPUT | C395 | | nsp | nsp | CERAMIC CAP. | 50V 0.1UF | CCKT1H104ZF |
| INPUT | C396 | | nsp | 00MOA10701620 | ELECT CAP. | 100UF 16V | HCEA1CH101T |
| INPUT | C403 | | nsp | nsp | CERAMIC CAP. | 470PF 50V KB | CCKT1H471KB |
| INPUT | C404 | | nsp | 00MOA10605020 | ELECT CAP. | 10UF 50V | HCEA1HH100T |
| INPUT | C406 | | nsp | 00MOA10605020 | ELECT CAP. | 10UF 50V | HCEA1HH100T |
| INPUT | C407 | | nsp | nsp | CERAMIC CAP. | 50V 0.1UF | CCKT1H104ZF |
| INPUT | C408 | | nsp | 00MOA10605020 | ELECT CAP. | 10UF 50V | HCEA1HH100T |
| INPUT | C409 | | nsp | 00MOA10605020 | ELECT CAP. | 10UF 50V | HCEA1HH100T |
| INPUT | C412 | | nsp | 00MOA10605020 | ELECT CAP. | 10UF 50V | HCEA1HH100T |
| INPUT | C413 | | nsp | 00MOA10605020 | ELECT CAP. | 10UF 50V | HCEA1HH100T |
| INPUT | C414 | | nsp | nsp | CERAMIC CAP. | 50V 0.1UF | CCKT1H104ZF |
| INPUT | C415 | | nsp | 00MOA22605020 | ELECT CAP. | 22UF 50V | HCEA1HH220T |
| INPUT | C416 | | nsp | 00MOA22605020 | ELECT CAP. | 22UF 50V | HCEA1HH220T |
| INPUT | C417 | | nsp | 00MOA10605020 | ELECT CAP. | 10UF 50V | HCEA1HH100T |
| INPUT | C418 | | nsp | 00MOA10605020 | ELECT CAP. | 10UF 50V | HCEA1HH100T |
| INPUT | C419 | | nsp | 00MOA22605020 | ELECT CAP. | 22UF 50V | HCEA1HH220T |
| INPUT | C420 | | nsp | 00MOA22605020 | ELECT CAP. | 22UF 50V | HCEA1HH220T |
| INPUT | C421 | | nsp | nsp | CERAMIC CAP. | 100PF 50V KB | CCKT1H101KB |
| INPUT | C423 | | nsp | 00MOA47602520 | ELECT CAP. | 47UF 25V | HCEA1EH470T |
| INPUT | C424 | | nsp | 00MOA47602520 | ELECT CAP. | 47UF 25V | HCEA1EH470T |
| INPUT | C425 | | nsp | nsp | CERAMIC CAP. | 470PF 50V KB | CCKT1H471KB |
| INPUT | C426 | | nsp | nsp | CERAMIC CAP. | 470PF 50V KB | CCKT1H471KB |
| INPUT | C427 | | nsp | 00MOA47602520 | ELECT CAP. | 47UF 25V | HCEA1EH470T |
| INPUT | C428 | | nsp | 00MOA22605020 | ELECT CAP. | 22UF 50V | HCEA1HH220T |
| INPUT | C429 | | nsp | nsp | CERAMIC CAP. | 100PF 50V KB | CCKT1H101KB |
| INPUT | C430 | | nsp | 00MOA47602520 | ELECT CAP. | 47UF 25V | HCEA1EH470T |
| INPUT | C431 | | nsp | nsp | CERAMIC CAP. | 470PF 50V KB | CCKT1H471KB |
| INPUT | C432 | | nsp | nsp | CERAMIC CAP. | 50V 0.1UF | CCKT1H104ZF |
| INPUT | C433 | | nsp | nsp | CERAMIC CAP. | 50V 0.1UF | CCKT1H104ZF |
| INPUT | C434 | | nsp | nsp | CERAMIC CAP. | 100PF 50V KB | CCKT1H101KB |
| INPUT | C442 | | nsp | nsp | CERAMIC CAP. | 100PF 50V KB | CCKT1H101KB |
| INPUT | CN11 | | nsp | nsp | JACK | MOLEX53014-0710 | KJP07GA19ZM |
| INPUT | CN21 | | nsp | nsp | JACK | MOLEX53014-0610 | KJP06GA19ZM |
| INPUT | CN23 | | nsp | nsp | JACK | MOLEX 5267-08A | KJP08GA01ZM |
| INPUT | CN24 | | nsp | nsp | JACK | MOLEX53014-0610 | KJP06GA19ZM |
| INPUT | CN25 | | nsp | nsp | JACK | C.CABLE | KJP19GA117ZG |
| INPUT | CN27 | | nsp | nsp | JACK | GF120-17S-TS | KJP17GA115ZG |
| INPUT | D203 | | nsp | 00MHD20015210 | DIODE | 1SS133T-77 | HVD1SS133MT |
| INPUT | D205 | | nsp | 00MHD20015210 | DIODE | 1SS133T-77 | HVD1SS133MT |
| INPUT | D206 | | nsp | 00MHD20015210 | DIODE | 1SS133T-77 | HVD1SS133MT |
| INPUT | D207 | | nsp | 00MHD20015210 | DIODE | 1SS133T-77 | HVD1SS133MT |
| INPUT | D208 | | nsp | 00MHD20015210 | DIODE | 1SS133T-77 | HVD1SS133MT |
| INPUT | D209 | | nsp | 00MHD20015210 | DIODE | 1SS133T-77 | HVD1SS133MT |
| INPUT | D210 | | nsp | 00MHD20015210 | DIODE | 1SS133T-77 | HVD1SS133MT |
| INPUT | D211 | | nsp | 00MHD20015210 | DIODE | 1SS133T-77 | HVD1SS133MT |
| INPUT | D212 | | nsp | 00MHD20015210 | DIODE | 1SS133T-77 | HVD1SS133MT |
| INPUT | D213 | | nsp | 90M-HD201730R | DIODE | 1N4003 | KVD1N4003ST |
| INPUT | D214 | | nsp | 90M-HD201730R | DIODE | 1N4003 | KVD1N4003ST |
| INPUT | D216 | | nsp | 00MHD20015210 | DIODE | 1SS133T-77 | HVD1SS133MT |
| INPUT | ET21 | | nsp | nsp | TERMINAL | PLATE , EARTH | CNE75 |
| INPUT | IC21 | | 00MHC10470050 | 00MHC10470050 | IC | TC9164AN | HVITC9164AN |
| INPUT | IC22 | | 00MHC10468050 | 00MHC10468050 | IC | TC9273N | HVITC9273N |
| INPUT | IC23 | | 00MHC10469050 | 00MHC10469050 | IC | TC9162AN | HVITC9162AN |

NOTE : “nsp” PARTS IS LISTED FOR REFERENCE ONLY, MARANTZ WILL NOT SUPPLY THESE PARTS.

| P.C.B. NAME | POS. NO. | VERS. COLOR | PART NO. (FOR EUR) | PART NO. (MJI) | PART NAME | DESCRIPTION | |
|---|---|---|---|---|---|---|---|
| INPUT | IC24 | | 00MHC10467050 | 00MHC10467050 | IC | TC9499N | HVITC9499N |
| INPUT | IC25 | | 00MHC10467050 | 00MHC10467050 | IC | TC9499N | HVITC9499N |
| INPUT | IC26 | | 90M-HC300550R | 90M-HC300550R | IC | | HVIMC7806 |
| INPUT | IC27 | | 90M-HC300540R | 90M-HC300540R | IC REG | KA7906 | HVIKA7906 |
| INPUT | IC28 | | 00MHC10053090 | 00MHC10053090 | IC | NJM2068DD | HVINJM2068DD |
| INPUT | IC29 | | 00MHC10053090 | 00MHC10053090 | IC | NJM2068DD | HVINJM2068DD |
| INPUT | IC30 | | 00MHC10053090 | 00MHC10053090 | IC | NJM2068DD | HVINJM2068DD |
| INPUT | IC31 | | 00MHC10053090 | 00MHC10053090 | IC | NJM2068DD | HVINJM2068DD |
| INPUT | IC32 | | 00MHC10053090 | 00MHC10053090 | IC | NJM2068DD | HVINJM2068DD |
| INPUT | IC33 | | 00MHC10053090 | 00MHC10053090 | IC | NJM2068DD | HVINJM2068DD |
| INPUT | IC34 | | 00MHC10053090 | 00MHC10053090 | IC | NJM2068DD | HVINJM2068DD |
| INPUT | IC35 | | 00MHC10053090 | 00MHC10053090 | IC | NJM2068DD | HVINJM2068DD |
| INPUT | IC36 | | 00MHC10053090 | 00MHC10053090 | IC | NJM2068DD | HVINJM2068DD |
| INPUT | IC37 | | 00MHC10053090 | 00MHC10053090 | IC | NJM2068DD | HVINJM2068DD |
| INPUT | IC38 | | 00MHC10468050 | 00MHC10468050 | IC | TC9273N | HVITC9273N |
| INPUT | IC40 | | 00MHC10053090 | 00MHC10053090 | IC | NJM2068DD | HVINJM2068DD |
| INPUT | IC41 | | 00MHC10053090 | 00MHC10053090 | IC | NJM2068DD | HVINJM2068DD |
| INPUT | J001 | | nsp | nsp | CONNECTIVE CORD | SN95/PB5 , 0.6 | C3A206 |
| INPUT | J002 | | nsp | nsp | CONNECTIVE CORD | SN95/PB5 , 0.6 | C3A206 |
| INPUT | J003 | | nsp | nsp | CONNECTIVE CORD | SN95/PB5 , 0.6 | C3A206 |
| INPUT | J004 | | nsp | nsp | CONNECTIVE CORD | SN95/PB5 , 0.6 | C3A206 |
| INPUT | J005 | | nsp | nsp | CONNECTIVE CORD | SN95/PB5 , 0.6 | C3A206 |
| INPUT | J006 | | nsp | nsp | CONNECTIVE CORD | SN95/PB5 , 0.6 | C3A206 |
| INPUT | J007 | | nsp | nsp | CONNECTIVE CORD | SN95/PB5 , 0.6 | C3A206 |
| INPUT | J008 | | nsp | nsp | CONNECTIVE CORD | SN95/PB5 , 0.6 | C3A206 |
| INPUT | J010 | | nsp | nsp | CONNECTIVE CORD | SN95/PB5 , 0.6 | C3A206 |
| INPUT | J011 | | nsp | nsp | CONNECTIVE CORD | SN95/PB5 , 0.6 | C3A206 |
| INPUT | J013 | | nsp | nsp | CONNECTIVE CORD | SN95/PB5 , 0.6 | C3A206 |
| INPUT | J014 | | nsp | nsp | CONNECTIVE CORD | SN95/PB5 , 0.6 | C3A206 |
| INPUT | J015 | | nsp | nsp | CONNECTIVE CORD | SN95/PB5 , 0.6 | C3A206 |
| INPUT | J016 | | nsp | nsp | CONNECTIVE CORD | SN95/PB5 , 0.6 | C3A206 |
| INPUT | J017 | | nsp | nsp | CONNECTIVE CORD | SN95/PB5 , 0.6 | C3A206 |
| INPUT | J018 | | nsp | nsp | CONNECTIVE CORD | SN95/PB5 , 0.6 | C3A206 |
| INPUT | J019 | | nsp | nsp | CONNECTIVE CORD | SN95/PB5 , 0.6 | C3A206 |
| INPUT | J020 | | nsp | nsp | CONNECTIVE CORD | SN95/PB5 , 0.6 | C3A206 |
| INPUT | J021 | | nsp | nsp | CONNECTIVE CORD | SN95/PB5 , 0.6 | C3A206 |
| INPUT | J022 | | nsp | nsp | CONNECTIVE CORD | SN95/PB5 , 0.6 | C3A206 |
| INPUT | J023 | | nsp | nsp | CONNECTIVE CORD | SN95/PB5 , 0.6 | C3A206 |
| INPUT | J024 | | nsp | nsp | CONNECTIVE CORD | SN95/PB5 , 0.6 | C3A206 |
| INPUT | J025 | | nsp | nsp | CONNECTIVE CORD | SN95/PB5 , 0.6 | C3A206 |
| INPUT | J026 | | nsp | nsp | CONNECTIVE CORD | SN95/PB5 , 0.6 | C3A206 |
| INPUT | J027 | | nsp | nsp | CONNECTIVE CORD | SN95/PB5 , 0.6 | C3A206 |
| INPUT | J028 | | nsp | nsp | CONNECTIVE CORD | SN95/PB5 , 0.6 | C3A206 |
| INPUT | J029 | | nsp | nsp | CONNECTIVE CORD | SN95/PB5 , 0.6 | C3A206 |
| INPUT | J030 | | nsp | nsp | CONNECTIVE CORD | SN95/PB5 , 0.6 | C3A206 |
| INPUT | J031 | | nsp | nsp | CONNECTIVE CORD | SN95/PB5 , 0.6 | C3A206 |
| INPUT | J032 | | nsp | nsp | CONNECTIVE CORD | SN95/PB5 , 0.6 | C3A206 |
| INPUT | J033 | | nsp | nsp | CONNECTIVE CORD | SN95/PB5 , 0.6 | C3A206 |
| INPUT | J034 | | nsp | nsp | CONNECTIVE CORD | SN95/PB5 , 0.6 | C3A206 |
| INPUT | J035 | | nsp | nsp | CONNECTIVE CORD | SN95/PB5 , 0.6 | C3A206 |
| INPUT | J036 | | nsp | nsp | CONNECTIVE CORD | SN95/PB5 , 0.6 | C3A206 |
| INPUT | J037 | | nsp | nsp | CONNECTIVE CORD | SN95/PB5 , 0.6 | C3A206 |
| INPUT | J038 | | nsp | nsp | CONNECTIVE CORD | SN95/PB5 , 0.6 | C3A206 |
| INPUT | J039 | | nsp | nsp | CONNECTIVE CORD | SN95/PB5 , 0.6 | C3A206 |
| INPUT | J040 | | nsp | nsp | CONNECTIVE CORD | SN95/PB5 , 0.6 | C3A206 |
| INPUT | J041 | | nsp | nsp | CONNECTIVE CORD | SN95/PB5 , 0.6 | C3A206 |
| INPUT | J042 | | nsp | nsp | CONNECTIVE CORD | SN95/PB5 , 0.6 | C3A206 |
| INPUT | J043 | | nsp | nsp | CONNECTIVE CORD | SN95/PB5 , 0.6 | C3A206 |
| INPUT | J044 | | nsp | nsp | CONNECTIVE CORD | SN95/PB5 , 0.6 | C3A206 |
| INPUT | J045 | | nsp | nsp | CONNECTIVE CORD | SN95/PB5 , 0.6 | C3A206 |
| INPUT | J046 | | nsp | nsp | CONNECTIVE CORD | SN95/PB5 , 0.6 | C3A206 |
| INPUT | J047 | | nsp | nsp | CONNECTIVE CORD | SN95/PB5 , 0.6 | C3A206 |
| INPUT | J048 | | nsp | nsp | CONNECTIVE CORD | SN95/PB5 , 0.6 | C3A206 |
| INPUT | J049 | | nsp | nsp | CONNECTIVE CORD | SN95/PB5 , 0.6 | C3A206 |
| INPUT | J050 | | nsp | nsp | CONNECTIVE CORD | SN95/PB5 , 0.6 | C3A206 |
| INPUT | J051 | | nsp | nsp | CONNECTIVE CORD | SN95/PB5 , 0.6 | C3A206 |
| INPUT | J053 | | nsp | nsp | CONNECTIVE CORD | SN95/PB5 , 0.6 | C3A206 |
| INPUT | J054 | | nsp | nsp | CONNECTIVE CORD | SN95/PB5 , 0.6 | C3A206 |

NOTE : “nsp” PARTS IS LISTED FOR REFERENCE ONLY, MARANTZ WILL NOT SUPPLY THESE PARTS.

| P.C.B. NAME | POS. NO. | VERS. COLOR | PART NO. (FOR EUR) | PART NO. (MJI) | PART NAME | DESCRIPTION |
|---|---|---|---|---|---|---|
| INPUT | J055 | | nsp | nsp | CONNECTIVE CORD | SN95/PB5 , 0.6 C3A206 |
| INPUT | J056 | | nsp | nsp | CONNECTIVE CORD | SN95/PB5 , 0.6 C3A206 |
| INPUT | J057 | | nsp | nsp | CONNECTIVE CORD | SN95/PB5 , 0.6 C3A206 |
| INPUT | J058 | | nsp | nsp | CONNECTIVE CORD | SN95/PB5 , 0.6 C3A206 |
| INPUT | J059 | | nsp | nsp | CONNECTIVE CORD | SN95/PB5 , 0.6 C3A206 |
| INPUT | J060 | | nsp | nsp | CONNECTIVE CORD | SN95/PB5 , 0.6 C3A206 |
| INPUT | J063 | | nsp | nsp | CONNECTIVE CORD | SN95/PB5 , 0.6 C3A206 |
| INPUT | J064 | | nsp | nsp | CONNECTIVE CORD | SN95/PB5 , 0.6 C3A206 |
| INPUT | J065 | | nsp | nsp | CONNECTIVE CORD | SN95/PB5 , 0.6 C3A206 |
| INPUT | J066 | | nsp | nsp | CONNECTIVE CORD | SN95/PB5 , 0.6 C3A206 |
| INPUT | J067 | | nsp | nsp | CONNECTIVE CORD | SN95/PB5 , 0.6 C3A206 |
| INPUT | J068 | | nsp | nsp | CONNECTIVE CORD | SN95/PB5 , 0.6 C3A206 |
| INPUT | J069 | | nsp | nsp | CONNECTIVE CORD | SN95/PB5 , 0.6 C3A206 |
| INPUT | J070 | | nsp | nsp | CONNECTIVE CORD | SN95/PB5 , 0.6 C3A206 |
| INPUT | J071 | | nsp | nsp | CONNECTIVE CORD | SN95/PB5 , 0.6 C3A206 |
| INPUT | J072 | | nsp | nsp | CONNECTIVE CORD | SN95/PB5 , 0.6 C3A206 |
| INPUT | J073 | | nsp | nsp | CONNECTIVE CORD | SN95/PB5 , 0.6 C3A206 |
| INPUT | J074 | | nsp | nsp | CONNECTIVE CORD | SN95/PB5 , 0.6 C3A206 |
| INPUT | J075 | | nsp | nsp | CONNECTIVE CORD | SN95/PB5 , 0.6 C3A206 |
| INPUT | J076 | | nsp | nsp | CONNECTIVE CORD | SN95/PB5 , 0.6 C3A206 |
| INPUT | J077 | | nsp | nsp | CONNECTIVE CORD | SN95/PB5 , 0.6 C3A206 |
| INPUT | J078 | | nsp | nsp | CONNECTIVE CORD | SN95/PB5 , 0.6 C3A206 |
| INPUT | J079 | | nsp | nsp | CONNECTIVE CORD | SN95/PB5 , 0.6 C3A206 |
| INPUT | J080 | | nsp | nsp | CONNECTIVE CORD | SN95/PB5 , 0.6 C3A206 |
| INPUT | J081 | | nsp | nsp | CONNECTIVE CORD | SN95/PB5 , 0.6 C3A206 |
| INPUT | J082 | | nsp | nsp | CONNECTIVE CORD | SN95/PB5 , 0.6 C3A206 |
| INPUT | J083 | | nsp | nsp | CONNECTIVE CORD | SN95/PB5 , 0.6 C3A206 |
| INPUT | J084 | | nsp | nsp | CONNECTIVE CORD | SN95/PB5 , 0.6 C3A206 |
| INPUT | J085 | | nsp | nsp | CONNECTIVE CORD | SN95/PB5 , 0.6 C3A206 |
| INPUT | J087 | | nsp | nsp | CONNECTIVE CORD | SN95/PB5 , 0.6 C3A206 |
| INPUT | J089 | | nsp | nsp | CONNECTIVE CORD | SN95/PB5 , 0.6 C3A206 |
| INPUT | J090 | | nsp | nsp | CONNECTIVE CORD | SN95/PB5 , 0.6 C3A206 |
| INPUT | J091 | | nsp | nsp | CONNECTIVE CORD | SN95/PB5 , 0.6 C3A206 |
| INPUT | J092 | | nsp | nsp | CONNECTIVE CORD | SN95/PB5 , 0.6 C3A206 |
| INPUT | J093 | | nsp | nsp | CONNECTIVE CORD | SN95/PB5 , 0.6 C3A206 |
| INPUT | J094 | | nsp | nsp | CONNECTIVE CORD | SN95/PB5 , 0.6 C3A206 |
| INPUT | J095 | | nsp | nsp | CONNECTIVE CORD | SN95/PB5 , 0.6 C3A206 |
| INPUT | J096 | | nsp | nsp | CONNECTIVE CORD | SN95/PB5 , 0.6 C3A206 |
| INPUT | J097 | | nsp | nsp | CONNECTIVE CORD | SN95/PB5 , 0.6 C3A206 |
| INPUT | J098 | | nsp | nsp | CONNECTIVE CORD | SN95/PB5 , 0.6 C3A206 |
| INPUT | J100 | | nsp | nsp | CONNECTIVE CORD | SN95/PB5 , 0.6 C3A206 |
| INPUT | J101 | | nsp | nsp | CONNECTIVE CORD | SN95/PB5 , 0.6 C3A206 |
| INPUT | J102 | | nsp | nsp | CONNECTIVE CORD | SN95/PB5 , 0.6 C3A206 |
| INPUT | J103 | | nsp | nsp | CONNECTIVE CORD | SN95/PB5 , 0.6 C3A206 |
| INPUT | J105 | | nsp | nsp | CONNECTIVE CORD | SN95/PB5 , 0.6 C3A206 |
| INPUT | J106 | | nsp | nsp | CONNECTIVE CORD | SN95/PB5 , 0.6 C3A206 |
| INPUT | J107 | | nsp | nsp | CONNECTIVE CORD | SN95/PB5 , 0.6 C3A206 |
| INPUT | J108 | | nsp | nsp | CONNECTIVE CORD | SN95/PB5 , 0.6 C3A206 |
| INPUT | J109 | | nsp | nsp | CONNECTIVE CORD | SN95/PB5 , 0.6 C3A206 |
| INPUT | J110 | | nsp | nsp | CONNECTIVE CORD | SN95/PB5 , 0.6 C3A206 |
| INPUT | J111 | | nsp | nsp | CONNECTIVE CORD | SN95/PB5 , 0.6 C3A206 |
| INPUT | J112 | | nsp | nsp | CONNECTIVE CORD | SN95/PB5 , 0.6 C3A206 |
| INPUT | J113 | | nsp | nsp | CONNECTIVE CORD | SN95/PB5 , 0.6 C3A206 |
| INPUT | J114 | | nsp | nsp | CONNECTIVE CORD | SN95/PB5 , 0.6 C3A206 |
| INPUT | J115 | | nsp | nsp | CONNECTIVE CORD | SN95/PB5 , 0.6 C3A206 |
| INPUT | J116 | | nsp | nsp | CONNECTIVE CORD | SN95/PB5 , 0.6 C3A206 |
| INPUT | J117 | | nsp | nsp | CONNECTIVE CORD | SN95/PB5 , 0.6 C3A206 |
| INPUT | J118 | | nsp | nsp | CONNECTIVE CORD | SN95/PB5 , 0.6 C3A206 |
| INPUT | J119 | | nsp | nsp | CONNECTIVE CORD | SN95/PB5 , 0.6 C3A206 |
| INPUT | J120 | | nsp | nsp | CONNECTIVE CORD | SN95/PB5 , 0.6 C3A206 |
| INPUT | J121 | | nsp | nsp | CONNECTIVE CORD | SN95/PB5 , 0.6 C3A206 |
| INPUT | J122 | | nsp | nsp | CONNECTIVE CORD | SN95/PB5 , 0.6 C3A206 |
| INPUT | J123 | | nsp | nsp | CONNECTIVE CORD | SN95/PB5 , 0.6 C3A206 |
| INPUT | J124 | | nsp | nsp | CONNECTIVE CORD | SN95/PB5 , 0.6 C3A206 |
| INPUT | J125 | | nsp | nsp | CONNECTIVE CORD | SN95/PB5 , 0.6 C3A206 |
| INPUT | J126 | | nsp | nsp | CONNECTIVE CORD | SN95/PB5 , 0.6 C3A206 |
| INPUT | J127 | | nsp | nsp | CONNECTIVE CORD | SN95/PB5 , 0.6 C3A206 |
| INPUT | J129 | | nsp | nsp | CONNECTIVE CORD | SN95/PB5 , 0.6 C3A206 |

NOTE : “nsp” PARTS IS LISTED FOR REFERENCE ONLY, MARANTZ WILL NOT SUPPLY THESE PARTS.

| P.C.B. NAME | POS. NO. | VERS. COLOR | PART NO. (FOR EUR) | PART NO. (MJI) | PART NAME | DESCRIPTION |
|---|---|---|---|---|---|---|
| INPUT | J131 | | nsp | nsp | CONNECTIVE CORD | SN95/PB5 , 0.6 C3A206 |
| INPUT | J132 | | nsp | nsp | CONNECTIVE CORD | SN95/PB5 , 0.6 C3A206 |
| INPUT | J133 | | nsp | nsp | CONNECTIVE CORD | SN95/PB5 , 0.6 C3A206 |
| INPUT | J135 | | nsp | nsp | CONNECTIVE CORD | SN95/PB5 , 0.6 C3A206 |
| INPUT | J136 | | nsp | nsp | CONNECTIVE CORD | SN95/PB5 , 0.6 C3A206 |
| INPUT | J137 | | nsp | nsp | CONNECTIVE CORD | SN95/PB5 , 0.6 C3A206 |
| INPUT | J138 | | nsp | nsp | CONNECTIVE CORD | SN95/PB5 , 0.6 C3A206 |
| INPUT | J139 | | nsp | nsp | CONNECTIVE CORD | SN95/PB5 , 0.6 C3A206 |
| INPUT | J140 | | nsp | nsp | CONNECTIVE CORD | SN95/PB5 , 0.6 C3A206 |
| INPUT | J141 | | nsp | nsp | CONNECTIVE CORD | SN95/PB5 , 0.6 C3A206 |
| INPUT | J142 | | nsp | nsp | CONNECTIVE CORD | SN95/PB5 , 0.6 C3A206 |
| INPUT | J143 | | nsp | nsp | CONNECTIVE CORD | SN95/PB5 , 0.6 C3A206 |
| INPUT | J144 | | nsp | nsp | CONNECTIVE CORD | SN95/PB5 , 0.6 C3A206 |
| INPUT | J145 | | nsp | nsp | CONNECTIVE CORD | SN95/PB5 , 0.6 C3A206 |
| INPUT | J146 | | nsp | nsp | CONNECTIVE CORD | SN95/PB5 , 0.6 C3A206 |
| INPUT | J149 | | nsp | nsp | CONNECTIVE CORD | SN95/PB5 , 0.6 C3A206 |
| INPUT | J150 | | nsp | nsp | CONNECTIVE CORD | SN95/PB5 , 0.6 C3A206 |
| INPUT | J151 | | nsp | nsp | CONNECTIVE CORD | SN95/PB5 , 0.6 C3A206 |
| INPUT | J152 | | nsp | nsp | CONNECTIVE CORD | SN95/PB5 , 0.6 C3A206 |
| INPUT | J153 | | nsp | nsp | CONNECTIVE CORD | SN95/PB5 , 0.6 C3A206 |
| INPUT | J154 | | nsp | nsp | CONNECTIVE CORD | SN95/PB5 , 0.6 C3A206 |
| INPUT | J155 | | nsp | nsp | CONNECTIVE CORD | SN95/PB5 , 0.6 C3A206 |
| INPUT | J156 | | nsp | nsp | CONNECTIVE CORD | SN95/PB5 , 0.6 C3A206 |
| INPUT | J157 | | nsp | nsp | CONNECTIVE CORD | SN95/PB5 , 0.6 C3A206 |
| INPUT | J158 | | nsp | nsp | CONNECTIVE CORD | SN95/PB5 , 0.6 C3A206 |
| INPUT | J159 | | nsp | nsp | CONNECTIVE CORD | SN95/PB5 , 0.6 C3A206 |
| INPUT | J160 | | nsp | nsp | CONNECTIVE CORD | SN95/PB5 , 0.6 C3A206 |
| INPUT | J161 | | nsp | nsp | CONNECTIVE CORD | SN95/PB5 , 0.6 C3A206 |
| INPUT | J162 | | nsp | nsp | CONNECTIVE CORD | SN95/PB5 , 0.6 C3A206 |
| INPUT | J163 | | nsp | nsp | CONNECTIVE CORD | SN95/PB5 , 0.6 C3A206 |
| INPUT | J164 | | nsp | nsp | CONNECTIVE CORD | SN95/PB5 , 0.6 C3A206 |
| INPUT | J165 | | nsp | nsp | CONNECTIVE CORD | SN95/PB5 , 0.6 C3A206 |
| INPUT | J166 | | nsp | nsp | CONNECTIVE CORD | SN95/PB5 , 0.6 C3A206 |
| INPUT | J167 | | nsp | nsp | CONNECTIVE CORD | SN95/PB5 , 0.6 C3A206 |
| INPUT | J168 | | nsp | nsp | CONNECTIVE CORD | SN95/PB5 , 0.6 C3A206 |
| INPUT | J169 | | nsp | nsp | CONNECTIVE CORD | SN95/PB5 , 0.6 C3A206 |
| INPUT | J170 | | nsp | nsp | CONNECTIVE CORD | SN95/PB5 , 0.6 C3A206 |
| INPUT | J171 | | nsp | nsp | CONNECTIVE CORD | SN95/PB5 , 0.6 C3A206 |
| INPUT | J172 | | nsp | nsp | CONNECTIVE CORD | SN95/PB5 , 0.6 C3A206 |
| INPUT | J174 | | nsp | nsp | CONNECTIVE CORD | SN95/PB5 , 0.6 C3A206 |
| INPUT | J175 | | nsp | nsp | CONNECTIVE CORD | SN95/PB5 , 0.6 C3A206 |
| INPUT | J176 | | nsp | nsp | CONNECTIVE CORD | SN95/PB5 , 0.6 C3A206 |
| INPUT | J177 | | nsp | nsp | CONNECTIVE CORD | SN95/PB5 , 0.6 C3A206 |
| INPUT | J178 | | nsp | nsp | CONNECTIVE CORD | SN95/PB5 , 0.6 C3A206 |
| INPUT | J179 | | nsp | nsp | CONNECTIVE CORD | SN95/PB5 , 0.6 C3A206 |
| INPUT | J180 | | nsp | nsp | CONNECTIVE CORD | SN95/PB5 , 0.6 C3A206 |
| INPUT | J181 | | nsp | nsp | CONNECTIVE CORD | SN95/PB5 , 0.6 C3A206 |
| INPUT | J182 | | nsp | nsp | CONNECTIVE CORD | SN95/PB5 , 0.6 C3A206 |
| INPUT | J183 | | nsp | nsp | CONNECTIVE CORD | SN95/PB5 , 0.6 C3A206 |
| INPUT | J184 | | nsp | nsp | CONNECTIVE CORD | SN95/PB5 , 0.6 C3A206 |
| INPUT | J186 | | nsp | nsp | CONNECTIVE CORD | SN95/PB5 , 0.6 C3A206 |
| INPUT | J187 | | nsp | nsp | CONNECTIVE CORD | SN95/PB5 , 0.6 C3A206 |
| INPUT | J188 | | nsp | nsp | CONNECTIVE CORD | SN95/PB5 , 0.6 C3A206 |
| INPUT | J189 | | nsp | nsp | CONNECTIVE CORD | SN95/PB5 , 0.6 C3A206 |
| INPUT | J191 | | nsp | nsp | CONNECTIVE CORD | SN95/PB5 , 0.6 C3A206 |
| INPUT | J192 | | nsp | nsp | CONNECTIVE CORD | SN95/PB5 , 0.6 C3A206 |
| INPUT | J193 | | nsp | nsp | CONNECTIVE CORD | SN95/PB5 , 0.6 C3A206 |
| INPUT | J194 | | nsp | nsp | CONNECTIVE CORD | SN95/PB5 , 0.6 C3A206 |
| INPUT | J196 | | nsp | nsp | CONNECTIVE CORD | SN95/PB5 , 0.6 C3A206 |
| INPUT | J197 | | nsp | nsp | CONNECTIVE CORD | SN95/PB5 , 0.6 C3A206 |
| INPUT | J198 | | nsp | nsp | CONNECTIVE CORD | SN95/PB5 , 0.6 C3A206 |
| INPUT | J199 | | nsp | nsp | CONNECTIVE CORD | SN95/PB5 , 0.6 C3A206 |
| INPUT | J200 | | nsp | nsp | CONNECTIVE CORD | SN95/PB5 , 0.6 C3A206 |
| INPUT | J201 | | nsp | nsp | CONNECTIVE CORD | SN95/PB5 , 0.6 C3A206 |
| INPUT | J202 | | nsp | nsp | CONNECTIVE CORD | SN95/PB5 , 0.6 C3A206 |
| INPUT | J203 | | nsp | nsp | CONNECTIVE CORD | SN95/PB5 , 0.6 C3A206 |
| INPUT | J204 | | nsp | nsp | CONNECTIVE CORD | SN95/PB5 , 0.6 C3A206 |
| INPUT | J205 | | nsp | nsp | CONNECTIVE CORD | SN95/PB5 , 0.6 C3A206 |

NOTE : “nsp” PARTS IS LISTED FOR REFERENCE ONLY, MARANTZ WILL NOT SUPPLY THESE PARTS.

| P.C.B. NAME | POS. NO. | VERS. COLOR | PART NO. (FOR EUR) | PART NO. (MJI) | PART NAME | DESCRIPTION |
|---|---|---|---|---|---|---|
| INPUT | J206 | | nsp | nsp | CONNECTIVE CORD | SN95/PB5 , 0.6 C3A206 |
| INPUT | J210 | | nsp | nsp | CONNECTIVE CORD | SN95/PB5 , 0.6 C3A206 |
| INPUT | J211 | | nsp | nsp | CONNECTIVE CORD | SN95/PB5 , 0.6 C3A206 |
| INPUT | J212 | | nsp | nsp | CONNECTIVE CORD | SN95/PB5 , 0.6 C3A206 |
| INPUT | J214 | | nsp | nsp | CONNECTIVE CORD | SN95/PB5 , 0.6 C3A206 |
| INPUT | J215 | | nsp | nsp | CONNECTIVE CORD | SN95/PB5 , 0.6 C3A206 |
| INPUT | J216 | | nsp | nsp | CONNECTIVE CORD | SN95/PB5 , 0.6 C3A206 |
| INPUT | J217 | | nsp | nsp | CONNECTIVE CORD | SN95/PB5 , 0.6 C3A206 |
| INPUT | J218 | | nsp | nsp | CONNECTIVE CORD | SN95/PB5 , 0.6 C3A206 |
| INPUT | J219 | | nsp | nsp | CONNECTIVE CORD | SN95/PB5 , 0.6 C3A206 |
| INPUT | J220 | | nsp | nsp | CONNECTIVE CORD | SN95/PB5 , 0.6 C3A206 |
| INPUT | J221 | | nsp | nsp | CONNECTIVE CORD | SN95/PB5 , 0.6 C3A206 |
| INPUT | J222 | | nsp | nsp | CONNECTIVE CORD | SN95/PB5 , 0.6 C3A206 |
| INPUT | J223 | | nsp | nsp | CONNECTIVE CORD | SN95/PB5 , 0.6 C3A206 |
| INPUT | J224 | | nsp | nsp | CONNECTIVE CORD | SN95/PB5 , 0.6 C3A206 |
| INPUT | J225 | | nsp | nsp | CONNECTIVE CORD | SN95/PB5 , 0.6 C3A206 |
| INPUT | J228 | | nsp | nsp | CONNECTIVE CORD | SN95/PB5 , 0.6 C3A206 |
| INPUT | J229 | | nsp | nsp | CONNECTIVE CORD | SN95/PB5 , 0.6 C3A206 |
| INPUT | J230 | | nsp | nsp | CONNECTIVE CORD | SN95/PB5 , 0.6 C3A206 |
| INPUT | J231 | | nsp | nsp | CONNECTIVE CORD | SN95/PB5 , 0.6 C3A206 |
| INPUT | J233 | | nsp | nsp | CONNECTIVE CORD | SN95/PB5 , 0.6 C3A206 |
| INPUT | J234 | | nsp | nsp | CONNECTIVE CORD | SN95/PB5 , 0.6 C3A206 |
| INPUT | J235 | | nsp | nsp | CONNECTIVE CORD | SN95/PB5 , 0.6 C3A206 |
| INPUT | J236 | | nsp | nsp | CONNECTIVE CORD | SN95/PB5 , 0.6 C3A206 |
| INPUT | J237 | | nsp | nsp | CONNECTIVE CORD | SN95/PB5 , 0.6 C3A206 |
| INPUT | J238 | | nsp | nsp | CONNECTIVE CORD | SN95/PB5 , 0.6 C3A206 |
| INPUT | J240 | | nsp | nsp | CONNECTIVE CORD | SN95/PB5 , 0.6 C3A206 |
| INPUT | J242 | | nsp | nsp | CONNECTIVE CORD | SN95/PB5 , 0.6 C3A206 |
| INPUT | J243 | | nsp | nsp | CONNECTIVE CORD | SN95/PB5 , 0.6 C3A206 |
| INPUT | J244 | | nsp | nsp | CONNECTIVE CORD | SN95/PB5 , 0.6 C3A206 |
| INPUT | J245 | | nsp | nsp | CONNECTIVE CORD | SN95/PB5 , 0.6 C3A206 |
| INPUT | J246 | | nsp | nsp | CONNECTIVE CORD | SN95/PB5 , 0.6 C3A206 |
| INPUT | J247 | | nsp | nsp | CONNECTIVE CORD | SN95/PB5 , 0.6 C3A206 |
| INPUT | J248 | | nsp | nsp | CONNECTIVE CORD | SN95/PB5 , 0.6 C3A206 |
| INPUT | J249 | | nsp | nsp | CONNECTIVE CORD | SN95/PB5 , 0.6 C3A206 |
| INPUT | J250 | | nsp | nsp | CONNECTIVE CORD | SN95/PB5 , 0.6 C3A206 |
| INPUT | J251 | | nsp | nsp | CONNECTIVE CORD | SN95/PB5 , 0.6 C3A206 |
| INPUT | J252 | | nsp | nsp | CONNECTIVE CORD | SN95/PB5 , 0.6 C3A206 |
| INPUT | J253 | | nsp | nsp | CONNECTIVE CORD | SN95/PB5 , 0.6 C3A206 |
| INPUT | J254 | | nsp | nsp | CONNECTIVE CORD | SN95/PB5 , 0.6 C3A206 |
| INPUT | J255 | | nsp | nsp | CONNECTIVE CORD | SN95/PB5 , 0.6 C3A206 |
| INPUT | J256 | | nsp | nsp | CONNECTIVE CORD | SN95/PB5 , 0.6 C3A206 |
| INPUT | J257 | | nsp | nsp | CONNECTIVE CORD | SN95/PB5 , 0.6 C3A206 |
| INPUT | J258 | | nsp | nsp | CONNECTIVE CORD | SN95/PB5 , 0.6 C3A206 |
| INPUT | J259 | | nsp | nsp | CONNECTIVE CORD | SN95/PB5 , 0.6 C3A206 |
| INPUT | J260 | | nsp | nsp | CONNECTIVE CORD | SN95/PB5 , 0.6 C3A206 |
| INPUT | J261 | | nsp | nsp | CONNECTIVE CORD | SN95/PB5 , 0.6 C3A206 |
| INPUT | J262 | | nsp | nsp | CONNECTIVE CORD | SN95/PB5 , 0.6 C3A206 |
| INPUT | J263 | | nsp | nsp | CONNECTIVE CORD | SN95/PB5 , 0.6 C3A206 |
| INPUT | J264 | | nsp | nsp | CONNECTIVE CORD | SN95/PB5 , 0.6 C3A206 |
| INPUT | J265 | | nsp | nsp | CONNECTIVE CORD | SN95/PB5 , 0.6 C3A206 |
| INPUT | J266 | | nsp | nsp | CONNECTIVE CORD | SN95/PB5 , 0.6 C3A206 |
| INPUT | J267 | | nsp | nsp | CONNECTIVE CORD | SN95/PB5 , 0.6 C3A206 |
| INPUT | J268 | | nsp | nsp | CONNECTIVE CORD | SN95/PB5 , 0.6 C3A206 |
| INPUT | J269 | | nsp | nsp | CONNECTIVE CORD | SN95/PB5 , 0.6 C3A206 |
| INPUT | J270 | | nsp | nsp | CONNECTIVE CORD | SN95/PB5 , 0.6 C3A206 |
| INPUT | J271 | | nsp | nsp | CONNECTIVE CORD | SN95/PB5 , 0.6 C3A206 |
| INPUT | J272 | | nsp | nsp | CONNECTIVE CORD | SN95/PB5 , 0.6 C3A206 |
| INPUT | J273 | | nsp | nsp | CONNECTIVE CORD | SN95/PB5 , 0.6 C3A206 |
| INPUT | J274 | | nsp | nsp | CONNECTIVE CORD | SN95/PB5 , 0.6 C3A206 |
| INPUT | J275 | | nsp | nsp | CONNECTIVE CORD | SN95/PB5 , 0.6 C3A206 |
| INPUT | J279 | | nsp | nsp | CONNECTIVE CORD | SN95/PB5 , 0.6 C3A206 |
| INPUT | J280 | | nsp | nsp | CONNECTIVE CORD | SN95/PB5 , 0.6 C3A206 |
| INPUT | J286 | | nsp | nsp | CONNECTIVE CORD | SN95/PB5 , 0.6 C3A206 |
| INPUT | J287 | | nsp | nsp | CONNECTIVE CORD | SN95/PB5 , 0.6 C3A206 |
| INPUT | J289 | | nsp | nsp | CONNECTIVE CORD | SN95/PB5 , 0.6 C3A206 |
| INPUT | J290 | | nsp | nsp | CONNECTIVE CORD | SN95/PB5 , 0.6 C3A206 |
| INPUT | J295 | | nsp | nsp | CONNECTIVE CORD | SN95/PB5 , 0.6 C3A206 |

NOTE : “nsp” PARTS IS LISTED FOR REFERENCE ONLY, MARANTZ WILL NOT SUPPLY THESE PARTS.

| P.C.B. NAME | POS. NO. | VERS. COLOR | PART NO. (FOR EUR) | PART NO. (MJI) | PART NAME | DESCRIPTION | |
|---|---|---|---|---|---|---|---|
| INPUT | J297 | | nsp | nsp | CONNECTIVE CORD | SN95/PB5 , 0.6 | C3A206 |
| INPUT | J298 | | nsp | nsp | CONNECTIVE CORD | SN95/PB5 , 0.6 | C3A206 |
| INPUT | J299 | | nsp | nsp | CONNECTIVE CORD | SN95/PB5 , 0.6 | C3A206 |
| INPUT | J301 | | nsp | nsp | CONNECTIVE CORD | SN95/PB5 , 0.6 | C3A206 |
| INPUT | J313 | | nsp | nsp | CONNECTIVE CORD | SN95/PB5 , 0.6 | C3A206 |
| INPUT | J318 | | nsp | nsp | CONNECTIVE CORD | SN95/PB5 , 0.6 | C3A206 |
| INPUT | J319 | | nsp | nsp | CONNECTIVE CORD | SN95/PB5 , 0.6 | C3A206 |
| INPUT | J855 | | nsp | nsp | CONNECTIVE CORD | SN95/PB5 , 0.6 | C3A206 |
| INPUT | J856 | | nsp | nsp | CONNECTIVE CORD | SN95/PB5 , 0.6 | C3A206 |
| INPUT | J857 | | nsp | nsp | CONNECTIVE CORD | SN95/PB5 , 0.6 | C3A206 |
| INPUT | J858 | | nsp | nsp | CONNECTIVE CORD | SN95/PB5 , 0.6 | C3A206 |
| INPUT | J859 | | nsp | nsp | CONNECTIVE CORD | SN95/PB5 , 0.6 | C3A206 |
| INPUT | J860 | | nsp | nsp | CONNECTIVE CORD | SN95/PB5 , 0.6 | C3A206 |
| INPUT | J861 | | nsp | nsp | CONNECTIVE CORD | SN95/PB5 , 0.6 | C3A206 |
| INPUT | J862 | | nsp | nsp | CONNECTIVE CORD | SN95/PB5 , 0.6 | C3A206 |
| INPUT | J863 | | nsp | nsp | CONNECTIVE CORD | SN95/PB5 , 0.6 | C3A206 |
| INPUT | J864 | | nsp | nsp | CONNECTIVE CORD | SN95/PB5 , 0.6 | C3A206 |
| INPUT | J865 | | nsp | nsp | CONNECTIVE CORD | SN95/PB5 , 0.6 | C3A206 |
| INPUT | J866 | | nsp | nsp | CONNECTIVE CORD | SN95/PB5 , 0.6 | C3A206 |
| INPUT | J867 | | nsp | nsp | CONNECTIVE CORD | SN95/PB5 , 0.6 | C3A206 |
| INPUT | J868 | | nsp | nsp | CONNECTIVE CORD | SN95/PB5 , 0.6 | C3A206 |
| INPUT | J869 | | nsp | nsp | CONNECTIVE CORD | SN95/PB5 , 0.6 | C3A206 |
| INPUT | J871 | | nsp | nsp | CONNECTIVE CORD | SN95/PB5 , 0.6 | C3A206 |
| INPUT | J872 | | nsp | nsp | CONNECTIVE CORD | SN95/PB5 , 0.6 | C3A206 |
| INPUT | J873 | | nsp | nsp | CONNECTIVE CORD | SN95/PB5 , 0.6 | C3A206 |
| INPUT | J874 | | nsp | nsp | CONNECTIVE CORD | SN95/PB5 , 0.6 | C3A206 |
| INPUT | J875 | | nsp | nsp | CONNECTIVE CORD | SN95/PB5 , 0.6 | C3A206 |
| INPUT | J876 | | nsp | nsp | CONNECTIVE CORD | SN95/PB5 , 0.6 | C3A206 |
| INPUT | J877 | | nsp | nsp | CONNECTIVE CORD | SN95/PB5 , 0.6 | C3A206 |
| INPUT | J878 | | nsp | nsp | CONNECTIVE CORD | SN95/PB5 , 0.6 | C3A206 |
| INPUT | J879 | | nsp | nsp | CONNECTIVE CORD | SN95/PB5 , 0.6 | C3A206 |
| INPUT | J880 | | nsp | nsp | CONNECTIVE CORD | SN95/PB5 , 0.6 | C3A206 |
| INPUT | J881 | | nsp | nsp | CONNECTIVE CORD | SN95/PB5 , 0.6 | C3A206 |
| INPUT | J882 | | nsp | nsp | CONNECTIVE CORD | SN95/PB5 , 0.6 | C3A206 |
| INPUT | J883 | | nsp | nsp | CONNECTIVE CORD | SN95/PB5 , 0.6 | C3A206 |
| INPUT | J884 | | nsp | nsp | CONNECTIVE CORD | SN95/PB5 , 0.6 | C3A206 |
| INPUT | J885 | | nsp | nsp | CONNECTIVE CORD | SN95/PB5 , 0.6 | C3A206 |
| INPUT | J886 | | nsp | nsp | CONNECTIVE CORD | SN95/PB5 , 0.6 | C3A206 |
| INPUT | J887 | | nsp | nsp | CONNECTIVE CORD | SN95/PB5 , 0.6 | C3A206 |
| INPUT | J888 | | nsp | nsp | CONNECTIVE CORD | SN95/PB5 , 0.6 | C3A206 |
| INPUT | J889 | | nsp | nsp | CONNECTIVE CORD | SN95/PB5 , 0.6 | C3A206 |
| INPUT | J990 | | nsp | nsp | CONNECTIVE CORD | SN95/PB5 , 0.6 | C3A206 |
| INPUT | J991 | | nsp | nsp | CONNECTIVE CORD | SN95/PB5 , 0.6 | C3A206 |
| INPUT | J992 | | nsp | nsp | CONNECTIVE CORD | SN95/PB5 , 0.6 | C3A206 |
| INPUT | J993 | | nsp | nsp | CONNECTIVE CORD | SN95/PB5 , 0.6 | C3A206 |
| INPUT | J994 | | nsp | nsp | CONNECTIVE CORD | SN95/PB5 , 0.6 | C3A206 |
| INPUT | J995 | | nsp | nsp | CONNECTIVE CORD | SN95/PB5 , 0.6 | C3A206 |
| INPUT | J996 | | nsp | nsp | CONNECTIVE CORD | SN95/PB5 , 0.6 | C3A206 |
| INPUT | J997 | | nsp | nsp | CONNECTIVE CORD | SN95/PB5 , 0.6 | C3A206 |
| INPUT | J998 | | nsp | nsp | CONNECTIVE CORD | SN95/PB5 , 0.6 | C3A206 |
| INPUT | J999 | | nsp | nsp | CONNECTIVE CORD | SN95/PB5 , 0.6 | C3A206 |
| INPUT | JK21 | | 90M-YT002960R | 90M-YT002960R | TERMINAL | IN/OUT | CJJ4R019Z |
| INPUT | JK22 | | 90M-YT002960R | 90M-YT002960R | TERMINAL | IN/OUT | CJJ4R019Z |
| INPUT | JK23 | | 90M-YT002960R | 90M-YT002960R | TERMINAL | IN/OUT | CJJ4R019Z |
| INPUT | JK24 | | 90M-YT002960R | 90M-YT002960R | TERMINAL | IN/OUT | CJJ4R019Z |
| INPUT | JK25 | | 90M-YT004050R | 90M-YT004050R | TERMINAL | RCA-401DA-16 | CJJ4P052Z |
| INPUT | JK26 | | 90M-YT004040R | 90M-YT004040R | TERMINAL | RCA-401DA-28 | CJJ4P051Z |
| INPUT | Q201 | | 00MHT805501B0 | 00MHT805501B0 | TRANSISTOR | KTC2874B | HVTKTC2874BT |
| INPUT | Q202 | | 00MHT805501B0 | 00MHT805501B0 | TRANSISTOR | KTC2874B | HVTKTC2874BT |
| INPUT | Q203 | | 00MHT805501B0 | 00MHT805501B0 | TRANSISTOR | KTC2874B | HVTKTC2874BT |
| INPUT | Q204 | | 00MHT805501B0 | 00MHT805501B0 | TRANSISTOR | KTC2874B | HVTKTC2874BT |
| INPUT | Q205 | | 00MHT805501B0 | 00MHT805501B0 | TRANSISTOR | KTC2874B | HVTKTC2874BT |
| INPUT | Q206 | | 00MHT805501B0 | 00MHT805501B0 | TRANSISTOR | KTC2874B | HVTKTC2874BT |
| INPUT | Q207 | | 00MHT805501B0 | 00MHT805501B0 | TRANSISTOR | KTC2874B | HVTKTC2874BT |
| INPUT | Q208 | | 00MHT805501B0 | 00MHT805501B0 | TRANSISTOR | KTC2874B | HVTKTC2874BT |
| INPUT | Q209 | | 00MHT805501B0 | 00MHT805501B0 | TRANSISTOR | KTC2874B | HVTKTC2874BT |
| INPUT | Q210 | | 00MHT805501B0 | 00MHT805501B0 | TRANSISTOR | KTC2874B | HVTKTC2874BT |
| INPUT | Q211 | | 00MHT805501B0 | 00MHT805501B0 | TRANSISTOR | KTC2874B | HVTKTC2874BT |

NOTE : “nsp” PARTS IS LISTED FOR REFERENCE ONLY, MARANTZ WILL NOT SUPPLY THESE PARTS.

| P.C.B. NAME | POS. NO. | VERS. COLOR | PART NO. (FOR EUR) | PART NO. (MJI) | PART NAME | DESCRIPTION | |
|---|---|---|---|---|---|---|---|
| INPUT | Q212 | | 00MHT805501B0 | 00MHT805501B0 | TRANSISTOR | KTC2874B | HVTKTC2874BT |
| INPUT | Q213 | | 00MHT805501B0 | 00MHT805501B0 | TRANSISTOR | KTC2874B | HVTKTC2874BT |
| INPUT | Q214 | | 00MHT805501B0 | 00MHT805501B0 | TRANSISTOR | KTC2874B | HVTKTC2874BT |
| INPUT | Q215 | | 00MBA10002000 | 00MBA10002000 | TRANSISTOR | KRA104M | HVTKRA104MT |
| INPUT | Q216 | | 00MBA10002000 | 00MBA10002000 | TRANSISTOR | KRA104M | HVTKRA104MT |
| INPUT | Q217 | | 00MBA10002000 | 00MBA10002000 | TRANSISTOR | KRA104M | HVTKRA104MT |
| INPUT | Q218 | | 00MBA10002000 | 00MBA10002000 | TRANSISTOR | KRA104M | HVTKRA104MT |
| INPUT | Q219 | | 00MBA10002000 | 00MBA10002000 | TRANSISTOR | KRA104M | HVTKRA104MT |
| INPUT | Q220 | | 00MBA10002000 | 00MBA10002000 | TRANSISTOR | KRA104M | HVTKRA104MT |
| INPUT | Q221 | | 00MBA20002000 | 00MBA20002000 | TRANSISTOR | KRC104M | HVTKRC104MT |
| INPUT | Q222 | | 00MBA20002000 | 00MBA20002000 | TRANSISTOR | KRC104M | HVTKRC104MT |
| INPUT | Q223 | | 00MBA20002000 | 00MBA20002000 | TRANSISTOR | KRC104M | HVTKRC104MT |
| INPUT | Q224 | | 00MBA20002000 | 00MBA20002000 | TRANSISTOR | KRC104M | HVTKRC104MT |
| INPUT | Q225 | | 00MBA20002000 | 00MBA20002000 | TRANSISTOR | KRC104M | HVTKRC104MT |
| INPUT | Q226 | | 00MBA20002000 | 00MBA20002000 | TRANSISTOR | KRC104M | HVTKRC104MT |
| INPUT | Q233 | | 00MHT805501B0 | 00MHT805501B0 | TRANSISTOR | KTC2874B | HVTKTC2874BT |
| INPUT | Q234 | | 00MHT805501B0 | 00MHT805501B0 | TRANSISTOR | KTC2874B | HVTKTC2874BT |
| INPUT | Q235 | | 00MHT805501B0 | 00MHT805501B0 | TRANSISTOR | KTC2874B | HVTKTC2874BT |
| INPUT | Q237 | | 00MHT805501B0 | 00MHT805501B0 | TRANSISTOR | KTC2874B | HVTKTC2874BT |
| INPUT | Q238 | | 00MHT805501B0 | 00MHT805501B0 | TRANSISTOR | KTC2874B | HVTKTC2874BT |
| INPUT | Q239 | | 00MHT805501B0 | 00MHT805501B0 | TRANSISTOR | KTC2874B | HVTKTC2874BT |
| INPUT | Q240 | | 00MBA20002000 | 00MBA20002000 | TRANSISTOR | KRC104M | HVTKRC104MT |
| INPUT | Q241 | | 00MBA20002000 | 00MBA20002000 | TRANSISTOR | KRC104M | HVTKRC104MT |
| INPUT | R201 | | nsp | nsp | RESISTOR | 100 OHM 1/5W J | CRD20TJ101T |
| INPUT | R202 | | nsp | nsp | RESISTOR | 100 OHM 1/5W J | CRD20TJ101T |
| INPUT | R203 | | nsp | nsp | RESISTOR | 100 OHM 1/5W J | CRD20TJ101T |
| INPUT | R204 | | nsp | nsp | RESISTOR | 100 OHM 1/5W J | CRD20TJ101T |
| INPUT | R205 | | nsp | nsp | RESISTOR | 100 OHM 1/5W J | CRD20TJ101T |
| INPUT | R206 | | nsp | nsp | RESISTOR | 100 OHM 1/5W J | CRD20TJ101T |
| INPUT | R207 | | nsp | nsp | RESISTOR | 1K OHM 1/5W J | CRD20TJ102T |
| INPUT | R208 | | nsp | nsp | RESISTOR | 1K OHM 1/5W J | CRD20TJ102T |
| INPUT | R209 | | nsp | nsp | RESISTOR | 100 OHM 1/5W J | CRD20TJ101T |
| INPUT | R210 | | nsp | nsp | RESISTOR | 100 OHM 1/5W J | CRD20TJ101T |
| INPUT | R211 | | nsp | nsp | RESISTOR | 1K OHM 1/5W J | CRD20TJ102T |
| INPUT | R212 | | nsp | nsp | RESISTOR | 1K OHM 1/5W J | CRD20TJ102T |
| INPUT | R213 | | nsp | nsp | RESISTOR | 100 OHM 1/5W J | CRD20TJ101T |
| INPUT | R214 | | nsp | nsp | RESISTOR | 100 OHM 1/5W J | CRD20TJ101T |
| INPUT | R215 | | nsp | nsp | RESISTOR | 100 OHM 1/5W J | CRD20TJ101T |
| INPUT | R216 | | nsp | nsp | RESISTOR | 100 OHM 1/5W J | CRD20TJ101T |
| INPUT | R217 | | nsp | nsp | RESISTOR | 1K OHM 1/5W J | CRD20TJ102T |
| INPUT | R218 | | nsp | nsp | RESISTOR | 1K OHM 1/5W J | CRD20TJ102T |
| INPUT | R219 | | nsp | nsp | RESISTOR | 100 OHM 1/5W J | CRD20TJ101T |
| INPUT | R220 | | nsp | nsp | RESISTOR | 100 OHM 1/5W J | CRD20TJ101T |
| INPUT | R221 | | nsp | nsp | RESISTOR | 1K OHM 1/5W J | CRD20TJ102T |
| INPUT | R222 | | nsp | nsp | RESISTOR | 1K OHM 1/5W J | CRD20TJ102T |
| INPUT | R223 | | nsp | nsp | RESISTOR | 82K OHM 1/5W J | CRD20TJ823T |
| INPUT | R224 | | nsp | nsp | RESISTOR | 82K OHM 1/5W J | CRD20TJ823T |
| INPUT | R225 | | nsp | nsp | RESISTOR | 82K OHM 1/5W J | CRD20TJ823T |
| INPUT | R226 | | nsp | nsp | RESISTOR | 82K OHM 1/5W J | CRD20TJ823T |
| INPUT | R227 | | nsp | nsp | RESISTOR | 82K OHM 1/5W J | CRD20TJ823T |
| INPUT | R228 | | nsp | nsp | RESISTOR | 82K OHM 1/5W J | CRD20TJ823T |
| INPUT | R229 | | nsp | nsp | RESISTOR | 47K OHM 1/5W J | CRD20TJ473T |
| INPUT | R230 | | nsp | nsp | RESISTOR | 47K OHM 1/5W J | CRD20TJ473T |
| INPUT | R231 | | nsp | nsp | RESISTOR | 82K OHM 1/5W J | CRD20TJ823T |
| INPUT | R232 | | nsp | nsp | RESISTOR | 82K OHM 1/5W J | CRD20TJ823T |
| INPUT | R233 | | nsp | nsp | RESISTOR | 47K OHM 1/5W J | CRD20TJ473T |
| INPUT | R234 | | nsp | nsp | RESISTOR | 47K OHM 1/5W J | CRD20TJ473T |
| INPUT | R235 | | nsp | nsp | RESISTOR | 82K OHM 1/5W J | CRD20TJ823T |
| INPUT | R236 | | nsp | nsp | RESISTOR | 82K OHM 1/5W J | CRD20TJ823T |
| INPUT | R237 | | nsp | nsp | RESISTOR | 82K OHM 1/5W J | CRD20TJ823T |
| INPUT | R238 | | nsp | nsp | RESISTOR | 82K OHM 1/5W J | CRD20TJ823T |
| INPUT | R239 | | nsp | nsp | RESISTOR | 47K OHM 1/5W J | CRD20TJ473T |
| INPUT | R240 | | nsp | nsp | RESISTOR | 47K OHM 1/5W J | CRD20TJ473T |
| INPUT | R241 | | nsp | nsp | RESISTOR | 82K OHM 1/5W J | CRD20TJ823T |
| INPUT | R242 | | nsp | nsp | RESISTOR | 82K OHM 1/5W J | CRD20TJ823T |
| INPUT | R243 | | nsp | nsp | RESISTOR | 47K OHM 1/5W J | CRD20TJ473T |
| INPUT | R244 | | nsp | nsp | RESISTOR | 47K OHM 1/5W J | CRD20TJ473T |
| INPUT | R245 | | nsp | nsp | RESISTOR | 100 OHM 1/5W J | CRD20TJ101T |

NOTE : “nsp” PARTS IS LISTED FOR REFERENCE ONLY, MARANTZ WILL NOT SUPPLY THESE PARTS.

| P.C.B. NAME | POS. NO. | VERS. COLOR | PART NO. (FOR EUR) | PART NO. (MJI) | PART NAME | DESCRIPTION | |
|---|---|---|---|---|---|---|---|
| INPUT | R246 | | nsp | nsp | RESISTOR | 100 OHM 1/5W J | CRD20TJ101T |
| INPUT | R247 | | nsp | nsp | RESISTOR | 100 OHM 1/5W J | CRD20TJ101T |
| INPUT | R248 | | nsp | nsp | RESISTOR | 100 OHM 1/5W J | CRD20TJ101T |
| INPUT | R249 | | nsp | nsp | RESISTOR | 100 OHM 1/5W J | CRD20TJ101T |
| INPUT | R250 | | nsp | nsp | RESISTOR | 100 OHM 1/5W J | CRD20TJ101T |
| INPUT | R251 | | nsp | nsp | RESISTOR | 100 OHM 1/5W J | CRD20TJ101T |
| INPUT | R252 | | nsp | nsp | RESISTOR | 47K OHM 1/5W J | CRD20TJ473T |
| INPUT | R253 | | nsp | nsp | RESISTOR | 47K OHM 1/5W J | CRD20TJ473T |
| INPUT | R254 | | nsp | nsp | RESISTOR | 47K OHM 1/5W J | CRD20TJ473T |
| INPUT | R255 | | nsp | nsp | RESISTOR | 47K OHM 1/5W J | CRD20TJ473T |
| INPUT | R256 | | nsp | nsp | RESISTOR | 47K OHM 1/5W J | CRD20TJ473T |
| INPUT | R257 | | nsp | nsp | RESISTOR | 47K OHM 1/5W J | CRD20TJ473T |
| INPUT | R258 | | nsp | nsp | RESISTOR | 47K OHM 1/5W J | CRD20TJ473T |
| INPUT | R266 | | nsp | nsp | RESISTOR | 47K OHM 1/5W J | CRD20TJ473T |
| INPUT | R267 | | nsp | nsp | RESISTOR | 47K OHM 1/5W J | CRD20TJ473T |
| INPUT | R268 | | nsp | nsp | RESISTOR | 47K OHM 1/5W J | CRD20TJ473T |
| INPUT | R269 | | nsp | nsp | RESISTOR | 47K OHM 1/5W J | CRD20TJ473T |
| INPUT | R270 | | nsp | nsp | RESISTOR | 47K OHM 1/5W J | CRD20TJ473T |
| INPUT | R271 | | nsp | nsp | RESISTOR | 47K OHM 1/5W J | CRD20TJ473T |
| INPUT | R272 | | nsp | nsp | RESISTOR | 47K OHM 1/5W J | CRD20TJ473T |
| INPUT | R273 | | nsp | nsp | RESISTOR | 100 OHM 1/5W J | CRD20TJ101T |
| INPUT | R274 | | nsp | nsp | RESISTOR | 100 OHM 1/5W J | CRD20TJ101T |
| INPUT | R275 | | nsp | nsp | RESISTOR | 220 KOHM 1/5W J | CRD20TJ224T |
| INPUT | R276 | | nsp | nsp | RESISTOR | 220 KOHM 1/5W J | CRD20TJ224T |
| INPUT | R277 | | nsp | nsp | RESISTOR | 220 KOHM 1/5W J | CRD20TJ224T |
| INPUT | R278 | | nsp | nsp | RESISTOR | 220 KOHM 1/5W J | CRD20TJ224T |
| INPUT | R279 | | nsp | nsp | RESISTOR | 47K OHM 1/5W J | CRD20TJ473T |
| INPUT | R280 | | nsp | nsp | RESISTOR | 47K OHM 1/5W J | CRD20TJ473T |
| INPUT | R281 | | nsp | nsp | RESISTOR | 47K OHM 1/5W J | CRD20TJ473T |
| INPUT | R282 | | nsp | nsp | RESISTOR | 47K OHM 1/5W J | CRD20TJ473T |
| INPUT | R283 | | nsp | nsp | RESISTOR | 100 OHM 1/5W J | CRD20TJ101T |
| INPUT | R284 | | nsp | nsp | RESISTOR | 47K OHM 1/5W J | CRD20TJ473T |
| INPUT | R285 | | nsp | nsp | RESISTOR | 47K OHM 1/5W J | CRD20TJ473T |
| INPUT | R286 | | nsp | nsp | RESISTOR | 47K OHM 1/5W J | CRD20TJ473T |
| INPUT | R287 | | nsp | nsp | RESISTOR | 47K OHM 1/5W J | CRD20TJ473T |
| INPUT | R288 | | nsp | nsp | RESISTOR | 47K OHM 1/5W J | CRD20TJ473T |
| INPUT | R289 | | nsp | nsp | RESISTOR | 47K OHM 1/5W J | CRD20TJ473T |
| INPUT | R290 | | nsp | nsp | RESISTOR | 47K OHM 1/5W J | CRD20TJ473T |
| INPUT | R291 | | nsp | nsp | RESISTOR | 100 OHM 1/5W J | CRD20TJ101T |
| INPUT | R292 | | nsp | nsp | RESISTOR | 100 OHM 1/5W J | CRD20TJ101T |
| INPUT | R293 | | nsp | nsp | RESISTOR | 47K OHM 1/5W J | CRD20TJ473T |
| INPUT | R294 | | nsp | nsp | RESISTOR | 47K OHM 1/5W J | CRD20TJ473T |
| INPUT | R295 | | nsp | nsp | RESISTOR | 47K OHM 1/5W J | CRD20TJ473T |
| INPUT | R296 | | nsp | nsp | RESISTOR | 47K OHM 1/5W J | CRD20TJ473T |
| INPUT | R297 | | nsp | nsp | RESISTOR | 47K OHM 1/5W J | CRD20TJ473T |
| INPUT | R298 | | nsp | nsp | RESISTOR | 47K OHM 1/5W J | CRD20TJ473T |
| INPUT | R299 | | nsp | nsp | RESISTOR | 47K OHM 1/5W J | CRD20TJ473T |
| INPUT | R300 | | nsp | nsp | RESISTOR | 8.2K OHM 1/5W J | CRD20TJ822T |
| INPUT | R301 | | nsp | nsp | RESISTOR | 8.2K OHM 1/5W J | CRD20TJ822T |
| INPUT | R302 | | nsp | nsp | RESISTOR | 4.7K OHM 1/5W J | CRD20TJ472T |
| INPUT | R303 | | nsp | nsp | RESISTOR | 4.7K OHM 1/5W J | CRD20TJ472T |
| INPUT | R304 | | nsp | nsp | RESISTOR | 8.2K OHM 1/5W J | CRD20TJ822T |
| INPUT | R305 | | nsp | nsp | RESISTOR | 8.2K OHM 1/5W J | CRD20TJ822T |
| INPUT | R306 | | nsp | nsp | RESISTOR | 4.7K OHM 1/5W J | CRD20TJ472T |
| INPUT | R314 | | nsp | nsp | RESISTOR | 15K OHM 1/5W J | CRD20TJ153T |
| INPUT | R315 | | nsp | nsp | RESISTOR | 15K OHM 1/5W J | CRD20TJ153T |
| INPUT | R316 | | nsp | nsp | RESISTOR | 4.7K OHM 1/5W J | CRD20TJ472T |
| INPUT | R317 | | nsp | nsp | RESISTOR | 4.7K OHM 1/5W J | CRD20TJ472T |
| INPUT | R318 | | nsp | nsp | RESISTOR | 15K OHM 1/5W J | CRD20TJ153T |
| INPUT | R319 | | nsp | nsp | RESISTOR | 15K OHM 1/5W J | CRD20TJ153T |
| INPUT | R320 | | nsp | nsp | RESISTOR | 4.7K OHM 1/5W J | CRD20TJ472T |
| INPUT | R321 | | nsp | nsp | RESISTOR | 47K OHM 1/5W J | CRD20TJ473T |
| INPUT | R322 | | nsp | nsp | RESISTOR | 47K OHM 1/5W J | CRD20TJ473T |
| INPUT | R323 | | nsp | nsp | RESISTOR | 47K OHM 1/5W J | CRD20TJ473T |
| INPUT | R324 | | nsp | nsp | RESISTOR | 47K OHM 1/5W J | CRD20TJ473T |
| INPUT | R325 | | nsp | nsp | RESISTOR | 47K OHM 1/5W J | CRD20TJ473T |
| INPUT | R326 | | nsp | nsp | RESISTOR | 47K OHM 1/5W J | CRD20TJ473T |
| INPUT | R327 | | nsp | nsp | RESISTOR | 47K OHM 1/5W J | CRD20TJ473T |

NOTE : “nsp” PARTS IS LISTED FOR REFERENCE ONLY, MARANTZ WILL NOT SUPPLY THESE PARTS.

| P.C.B. NAME | POS. NO. | VERS. COLOR | PART NO. (FOR EUR) | PART NO. (MJI) | PART NAME | DESCRIPTION | |
|---|---|---|---|---|---|---|---|
| INPUT | R328 | | nsp | nsp | RESISTOR | 220 OHM 1/5W J | CRD20TJ221T |
| INPUT | R329 | | nsp | nsp | RESISTOR | 220 OHM 1/5W J | CRD20TJ221T |
| INPUT | R330 | | nsp | nsp | RESISTOR | 220 OHM 1/5W J | CRD20TJ221T |
| INPUT | R331 | | nsp | nsp | RESISTOR | 220 OHM 1/5W J | CRD20TJ221T |
| INPUT | R332 | | nsp | nsp | RESISTOR | 220 OHM 1/5W J | CRD20TJ221T |
| INPUT | R333 | | nsp | nsp | RESISTOR | 220 OHM 1/5W J | CRD20TJ221T |
| INPUT | R334 | | nsp | nsp | RESISTOR | 220 OHM 1/5W J | CRD20TJ221T |
| INPUT | R336 | | nsp | nsp | RESISTOR | 1M OHM 1/5W J | CRD20TJ105T |
| INPUT | R338 | | nsp | nsp | RESISTOR | 1M OHM 1/5W J | CRD20TJ105T |
| INPUT | R340 | | nsp | nsp | RESISTOR | 1M OHM 1/5W J | CRD20TJ105T |
| INPUT | R341 | | nsp | nsp | RESISTOR | 1M OHM 1/5W J | CRD20TJ105T |
| INPUT | R342 | | nsp | nsp | RESISTOR | 10K OHM 1/5W J | CRD20TJ103T |
| INPUT | R343 | | nsp | nsp | RESISTOR | 10K OHM 1/5W J | CRD20TJ103T |
| INPUT | R344 | | nsp | nsp | RESISTOR | 10K OHM 1/5W J | CRD20TJ103T |
| INPUT | R345 | | nsp | nsp | RESISTOR | 10K OHM 1/5W J | CRD20TJ103T |
| INPUT | R346 | | nsp | nsp | RESISTOR | 10K OHM 1/5W J | CRD20TJ103T |
| INPUT | R347 | | nsp | nsp | RESISTOR | 10K OHM 1/5W J | CRD20TJ103T |
| INPUT | R348 | | nsp | nsp | RESISTOR | 10K OHM 1/5W J | CRD20TJ103T |
| INPUT | R349 | | nsp | nsp | RESISTOR | 10K OHM 1/5W J | CRD20TJ103T |
| INPUT | R350 | | nsp | nsp | RESISTOR | 10K OHM 1/5W J | CRD20TJ103T |
| INPUT | R351 | | nsp | nsp | RESISTOR | 10K OHM 1/5W J | CRD20TJ103T |
| INPUT | R352 | | nsp | nsp | RESISTOR | 10K OHM 1/5W J | CRD20TJ103T |
| INPUT | R353 | | nsp | nsp | RESISTOR | 10K OHM 1/5W J | CRD20TJ103T |
| INPUT | R354 | | nsp | nsp | RESISTOR | 10K OHM 1/5W J | CRD20TJ103T |
| INPUT | R355 | | nsp | nsp | RESISTOR | 10K OHM 1/5W J | CRD20TJ103T |
| INPUT | R356 | | nsp | nsp | RESISTOR | 220 OHM 1/5W J | CRD20TJ221T |
| INPUT | R357 | | nsp | nsp | RESISTOR | 220 OHM 1/5W J | CRD20TJ221T |
| INPUT | R358 | | nsp | nsp | RESISTOR | 220 OHM 1/5W J | CRD20TJ221T |
| INPUT | R359 | | nsp | nsp | RESISTOR | 220 OHM 1/5W J | CRD20TJ221T |
| INPUT | R360 | | nsp | nsp | RESISTOR | 220 OHM 1/5W J | CRD20TJ221T |
| INPUT | R361 | | nsp | nsp | RESISTOR | 220 OHM 1/5W J | CRD20TJ221T |
| INPUT | R362 | | nsp | nsp | RESISTOR | 220 OHM 1/5W J | CRD20TJ221T |
| INPUT | R363 | | nsp | nsp | RESISTOR | 33 OHM 1/5W J | CRD20TJ330T |
| INPUT | R364 | | nsp | nsp | RESISTOR | 33 OHM 1/5W J | CRD20TJ330T |
| INPUT | R365 | | nsp | nsp | RESISTOR | 33 OHM 1/5W J | CRD20TJ330T |
| INPUT | R366 | | nsp | nsp | RESISTOR | 33 OHM 1/5W J | CRD20TJ330T |
| INPUT | R367 | | nsp | nsp | RESISTOR | 33 OHM 1/5W J | CRD20TJ330T |
| INPUT | R368 | | nsp | nsp | RESISTOR | 33 OHM 1/5W J | CRD20TJ330T |
| INPUT | R369 | | nsp | nsp | RESISTOR | 33 OHM 1/5W J | CRD20TJ330T |
| INPUT | R370 | | nsp | nsp | RESISTOR | 100 OHM 1/5W J | CRD20TJ101T |
| INPUT | R371 | | nsp | nsp | RESISTOR | 100 OHM 1/5W J | CRD20TJ101T |
| INPUT | R372 | | nsp | nsp | RESISTOR | 100 OHM 1/5W J | CRD20TJ101T |
| INPUT | R373 | | nsp | nsp | RESISTOR | 100 OHM 1/5W J | CRD20TJ101T |
| INPUT | R402 | | nsp | nsp | RESISTOR | 100 OHM 1/5W J | CRD20TJ101T |
| INPUT | R403 | | nsp | nsp | RESISTOR | 100K OHM 1/5W J | CRD20TJ104T |
| INPUT | R404 | | nsp | nsp | RESISTOR | 100K OHM 1/5W J | CRD20TJ104T |
| INPUT | R405 | | nsp | nsp | RESISTOR | 100K OHM 1/5W J | CRD20TJ104T |
| INPUT | R406 | | nsp | nsp | RESISTOR | 100K OHM 1/5W J | CRD20TJ104T |
| INPUT | R407 | | nsp | nsp | RESISTOR | 47K OHM 1/5W J | CRD20TJ473T |
| INPUT | R408 | | nsp | nsp | RESISTOR | 47K OHM 1/5W J | CRD20TJ473T |
| INPUT | R409 | | nsp | nsp | RESISTOR | 47K OHM 1/5W J | CRD20TJ473T |
| INPUT | R410 | | nsp | nsp | RESISTOR | 4.7K OHM 1/5W J | CRD20TJ472T |
| INPUT | R411 | | nsp | nsp | RESISTOR | 33K OHM 1/5W J | CRD20TJ333T |
| INPUT | R413 | | nsp | nsp | RESISTOR | 47K OHM 1/5W J | CRD20TJ473T |
| INPUT | R414 | | nsp | nsp | RESISTOR | 220 OHM 1/5W J | CRD20TJ221T |
| INPUT | R415 | | nsp | nsp | RESISTOR | 1M OHM 1/5W J | CRD20TJ105T |
| INPUT | R416 | | nsp | nsp | RESISTOR | 10K OHM 1/5W J | CRD20TJ103T |
| INPUT | R417 | | nsp | nsp | RESISTOR | 10K OHM 1/5W J | CRD20TJ103T |
| INPUT | R418 | | nsp | nsp | RESISTOR | 220 OHM 1/5W J | CRD20TJ221T |
| INPUT | R419 | | nsp | nsp | RESISTOR | 33 OHM 1/5W J | CRD20TJ330T |
| INPUT | R420 | | nsp | nsp | RESISTOR | 47K OHM 1/5W J | CRD20TJ473T |
| INPUT | R421 | | nsp | nsp | RESISTOR | 4.7K OHM 1/5W J | CRD20TJ472T |
| INPUT | R423 | | nsp | nsp | RESISTOR | 4.7K OHM 1/5W J | CRD20TJ472T |
| INPUT | R424 | | nsp | nsp | RESISTOR | 220 OHM 1/5W J | CRD20TJ221T |
| INPUT | R425 | | nsp | nsp | RESISTOR | 47K OHM 1/5W J | CRD20TJ473T |
| INPUT | R426 | | nsp | nsp | RESISTOR | 47K OHM 1/5W J | CRD20TJ473T |
| INPUT | R427 | | nsp | nsp | RESISTOR | 220 OHM 1/5W J | CRD20TJ221T |
| INPUT | R428 | | nsp | nsp | RESISTOR | 4.7K OHM 1/5W J | CRD20TJ472T |

NOTE : “nsp” PARTS IS LISTED FOR REFERENCE ONLY, MARANTZ WILL NOT SUPPLY THESE PARTS.

| P.C.B. NAME | POS. NO. | VERS. COLOR | PART NO. (FOR EUR) | PART NO. (MJI) | PART NAME | DESCRIPTION | |
|---|---|---|---|---|---|---|---|
| INPUT | R429 | | nsp | nsp | RESISTOR | 4.7K OHM 1/5W J | CRD20TJ472T |
| INPUT | R431 | | nsp | nsp | RESISTOR | 47K OHM 1/5W J | CRD20TJ473T |
| INPUT | R432 | | nsp | nsp | RESISTOR | 1M OHM 1/5W J | CRD20TJ105T |
| INPUT | R433 | | nsp | nsp | RESISTOR | 10K OHM 1/5W J | CRD20TJ103T |
| INPUT | R434 | | nsp | nsp | RESISTOR | 10K OHM 1/5W J | CRD20TJ103T |
| INPUT | R435 | | nsp | nsp | RESISTOR | 220 OHM 1/5W J | CRD20TJ221T |
| INPUT | R436 | | nsp | nsp | RESISTOR | 10K OHM 1/5W J | CRD20TJ103T |
| INPUT | R437 | | nsp | nsp | RESISTOR | 10K OHM 1/5W J | CRD20TJ103T |
| INPUT | R438 | | nsp | nsp | RESISTOR | 220 OHM 1/5W J | CRD20TJ221T |
| INPUT | R439 | | nsp | nsp | RESISTOR | 33 OHM 1/5W J | CRD20TJ330T |
| INPUT | R440 | | nsp | nsp | RESISTOR | 33 OHM 1/5W J | CRD20TJ330T |
| INPUT | R441 | | nsp | nsp | RESISTOR | 100 OHM 1/5W J | CRD20TJ101T |
| INPUT | R442 | | nsp | nsp | RESISTOR | 47K OHM 1/5W J | CRD20TJ473T |
| INPUT | R444 | | nsp | nsp | RESISTOR | 47K OHM 1/5W J | CRD20TJ473T |
| INPUT | R445 | | nsp | nsp | RESISTOR | 47K OHM 1/5W J | CRD20TJ473T |
| INPUT | R446 | | nsp | nsp | RESISTOR | 100 OHM 1/5W J | CRD20TJ101T |
| INPUT | R447 | | nsp | nsp | RESISTOR | 100 OHM 1/5W J | CRD20TJ101T |
| INPUT | R448 | | nsp | nsp | RESISTOR | 47K OHM 1/5W J | CRD20TJ473T |
| INPUT | R449 | | nsp | nsp | RESISTOR | 47K OHM 1/5W J | CRD20TJ473T |
| | | | | | **POWER PCB (CUP11707Z)** | | |
| POWER | BN21 | | nsp | nsp | CONNECTIVE CORD | | CWB1C906270EN |
| POWER | BN65 | | nsp | nsp | CONNECTIVE CORD | | CWB3F006100UZ |
| POWER | BN81 | | nsp | nsp | CONNECTIVE CORD | | CWB1B906150EN |
| POWER | BN82 | | nsp | nsp | CONNECTIVE CORD | | CWZSR7400BN82 |
| POWER | C600 | | 90M-OF100370R | 90M-OF100370R | FILM CAP | 0.022UF 50V J | HCQI1H223JZT |
| POWER | C601 | | 90M-OF100370R | 90M-OF100370R | FILM CAP | 0.022UF 50V J | HCQI1H223JZT |
| POWER | C602 | | 90M-OF100370R | 90M-OF100370R | FILM CAP | 0.022UF 50V J | HCQI1H223JZT |
| POWER | C603 | | 90M-OF100370R | 90M-OF100370R | FILM CAP | 0.022UF 50V J | HCQI1H223JZT |
| POWER | C604 | | 90M-OF100370R | 90M-OF100370R | FILM CAP | 0.022UF 50V J | HCQI1H223JZT |
| POWER | C605 | | 90M-OF100370R | 90M-OF100370R | FILM CAP | 0.022UF 50V J | HCQI1H223JZT |
| POWER | C606 | | 90M-OF100370R | 90M-OF100370R | FILM CAP | 0.022UF 50V J | HCQI1H223JZT |
| POWER | C611 | | nsp | nsp | CERAMIC CAP. | 1000PF 50V KB | CCKT1H102KB |
| POWER | C612 | | nsp | nsp | CERAMIC CAP. | 1000PF 50V KB | CCKT1H102KB |
| POWER | C613 | | nsp | nsp | CERAMIC CAP. | 1000PF 50V KB | CCKT1H102KB |
| POWER | C614 | | nsp | nsp | CERAMIC CAP. | 1000PF 50V KB | CCKT1H102KB |
| POWER | C615 | | nsp | nsp | CERAMIC CAP. | 1000PF 50V KB | CCKT1H102KB |
| POWER | C620 | | 90M-OF100370R | 90M-OF100370R | FILM CAP | 0.022UF 50V J | HCQI1H223JZT |
| POWER | C621 | | 90M-OF100370R | 90M-OF100370R | FILM CAP | 0.022UF 50V J | HCQI1H223JZT |
| POWER | C622 | | 90M-OF100370R | 90M-OF100370R | FILM CAP | 0.022UF 50V J | HCQI1H223JZT |
| POWER | C623 | | 90M-OF100370R | 90M-OF100370R | FILM CAP | 0.022UF 50V J | HCQI1H223JZT |
| POWER | C624 | | 90M-OF100370R | 90M-OF100370R | FILM CAP | 0.022UF 50V J | HCQI1H223JZT |
| POWER | C625 | | 90M-OF100370R | 90M-OF100370R | FILM CAP | 0.022UF 50V J | HCQI1H223JZT |
| POWER | C626 | | 90M-OF100370R | 90M-OF100370R | FILM CAP | 0.022UF 50V J | HCQI1H223JZT |
| POWER | ⚠ C633 | | 00MEB12906330 | 00MEB12906330 | ELECT CAP. | DL63VN 12000(M) | HCET63VDL123N |
| POWER | ⚠ C634 | | 00MEB12906330 | 00MEB12906330 | ELECT CAP. | DL63VN 12000(M) | HCET63VDL123N |
| POWER | C638 | | nsp | 00MOA47601640 | ELECT CAP. | 47UF 16V | HCEA1CH470T |
| POWER | C639 | | nsp | nsp | CERAMIC CAP. | 1000PF 50V KB | CCKT1H102KB |
| POWER | C640 | | 90M-OA000160R | 90M-OA000160R | ELECT CAP. | 3300UF 35V | HCEA1VH332E |
| POWER | C641 | | nsp | 00MOA22803520 | ELECT CAP. | 2200UF 35V | HCEA1VH222E |
| POWER | C642 | | nsp | nsp | CERAMIC CAP. | 0.01UF 50V ZF | CCKT1H103ZF |
| POWER | C644 | | nsp | nsp | CERAMIC CAP. | 0.01UF 50V ZF | CCKT1H103ZF |
| POWER | C645 | | nsp | nsp | CERAMIC CAP. | 0.01UF 50V ZF | CCKT1H103ZF |
| POWER | C646 | | nsp | nsp | CERAMIC CAP. | 0.01UF 50V ZF | CCKT1H103ZF |
| POWER | C647 | | nsp | nsp | CERAMIC CAP. | 0.01UF 50V ZF | CCKT1H103ZF |
| POWER | C648 | | nsp | 00MOA10701620 | ELECT CAP. | 100UF 16V | HCEA1CH101T |
| POWER | C649 | | nsp | 00MOA10701620 | ELECT CAP. | 100UF 16V | HCEA1CH101T |
| POWER | C651 | | nsp | 00MOA68801620 | ELECT CAP. | 6800UF 16V | HCEA1CH682E |
| POWER | C652 | | 00MEA10901670 | 00MEA10901670 | ELECT CAP. | 10000UF 16V | HCEA1CH103E |
| POWER | C653 | | nsp | 00MOA10701620 | ELECT CAP. | 100UF 16V | HCEA1CH101T |
| POWER | C654 | | nsp | 00MOA10701620 | ELECT CAP. | 100UF 16V | HCEA1CH101T |
| POWER | C655 | | nsp | nsp | CERAMIC CAP. | 50V 0.1UF | CCKT1H104ZF |
| POWER | C656 | | nsp | nsp | CERAMIC CAP. | 50V 0.1UF | CCKT1H104ZF |
| POWER | C657 | | nsp | nsp | CERAMIC CAP. | 50V 0.1UF | CCKT1H104ZF |
| POWER | C658 | | nsp | nsp | CERAMIC CAP. | 50V 0.1UF | CCKT1H104ZF |
| POWER | C659 | | nsp | 00MOA10710020 | ELECT CAP. | 100UF 100V | HCEA2AH101E |
| POWER | C661 | | nsp | nsp | CERAMIC CAP. | 50V 0.1UF | CCKT1H104ZF |
| POWER | C662 | | nsp | nsp | CERAMIC CAP. | 50V 0.1UF | CCKT1H104ZF |
| POWER | C663 | | nsp | nsp | CERAMIC CAP. | 50V 0.1UF | CCKT1H104ZF |

NOTE : “nsp” PARTS IS LISTED FOR REFERENCE ONLY, MARANTZ WILL NOT SUPPLY THESE PARTS.

| P.C.B. NAME | POS. NO. | VERS. COLOR | PART NO. (FOR EUR) | PART NO. (MJI) | PART NAME | DESCRIPTION | |
|---|---|---|---|---|---|---|---|
| POWER | C664 | | nsp | nsp | CERAMIC CAP. | 50V 0.1UF | CCKT1H104ZF |
| POWER | C702 | | nsp | 00MOA10605020 | ELECT CAP. | 10UF 50V | HCEA1HH100T |
| POWER | C704 | | nsp | 00MOA10605020 | ELECT CAP. | 10UF 50V | HCEA1HH100T |
| POWER | C706 | | nsp | 00MOA10605020 | ELECT CAP. | 10UF 50V | HCEA1HH100T |
| POWER | C707 | | nsp | nsp | CERAMIC CAP. | 47PF 50V JC | CCCT1H470JC |
| POWER | C708 | | nsp | 00MOA47701020 | ELECT CAP. | 470UF 10V | HCEA1AH471T |
| POWER | C710 | | nsp | 00MOA10605020 | ELECT CAP. | 10UF 50V | HCEA1HH100T |
| POWER | C711 | | nsp | nsp | CERAMIC CAP. | 47PF 50V JC | CCCT1H470JC |
| POWER | C712 | | nsp | 00MOA47701020 | ELECT CAP. | 470UF 10V | HCEA1AH471T |
| POWER | C713 | | nsp | nsp | CERAMIC CAP. | 68PF 50V JC | CCCT1H680JC |
| POWER | C714 | | nsp | 00MOA47701020 | ELECT CAP. | 470UF 10V | HCEA1AH471T |
| POWER | C715 | | nsp | 00MOA10605020 | ELECT CAP. | 10UF 50V | HCEA1HH100T |
| POWER | C716 | | nsp | 00MOA10605020 | ELECT CAP. | 10UF 50V | HCEA1HH100T |
| POWER | C717 | | nsp | 00MOA10605020 | ELECT CAP. | 10UF 50V | HCEA1HH100T |
| POWER | C719 | | nsp | 00MOA10605020 | ELECT CAP. | 10UF 50V | HCEA1HH100T |
| POWER | C720 | | nsp | 00MOA10605020 | ELECT CAP. | 10UF 50V | HCEA1HH100T |
| POWER | C722 | | nsp | 00MOA10605020 | ELECT CAP. | 10UF 50V | HCEA1HH100T |
| POWER | C723 | | nsp | 00MOA10605020 | ELECT CAP. | 10UF 50V | HCEA1HH100T |
| POWER | C725 | | nsp | 00MOA10605020 | ELECT CAP. | 10UF 50V | HCEA1HH100T |
| POWER | C726 | | nsp | 00MOA10605020 | ELECT CAP. | 10UF 50V | HCEA1HH100T |
| POWER | C727 | | nsp | nsp | CERAMIC CAP. | 47PF 50V JC | CCCT1H470JC |
| POWER | C728 | | nsp | 00MOA47701020 | ELECT CAP. | 470UF 10V | HCEA1AH471T |
| POWER | C729 | | nsp | nsp | CERAMIC CAP. | 47PF 50V JC | CCCT1H470JC |
| POWER | C730 | | nsp | 00MOA10605020 | ELECT CAP. | 10UF 50V | HCEA1HH100T |
| POWER | C732 | | nsp | 00MOA10605020 | ELECT CAP. | 10UF 50V | HCEA1HH100T |
| POWER | C733 | | nsp | 00MOA10605020 | ELECT CAP. | 10UF 50V | HCEA1HH100T |
| POWER | C734 | | nsp | nsp | CERAMIC CAP. | 47PF 50V JC | CCCT1H470JC |
| POWER | C735 | | nsp | 00MOA47701020 | ELECT CAP. | 470UF 10V | HCEA1AH471T |
| POWER | C736 | | nsp | nsp | CERAMIC CAP. | 47PF 50V JC | CCCT1H470JC |
| POWER | C737 | | nsp | 00MOA10605020 | ELECT CAP. | 10UF 50V | HCEA1HH100T |
| POWER | C738 | | nsp | nsp | CERAMIC CAP. | 68PF 50V JC | CCCT1H680JC |
| POWER | C739 | | nsp | 00MOA47701020 | ELECT CAP. | 470UF 10V | HCEA1AH471T |
| POWER | C740 | | nsp | nsp | CERAMIC CAP. | 68PF 50V JC | CCCT1H680JC |
| POWER | C741 | | nsp | 00MOA10605020 | ELECT CAP. | 10UF 50V | HCEA1HH100T |
| POWER | C742 | | nsp | 00MOA10605020 | ELECT CAP. | 10UF 50V | HCEA1HH100T |
| POWER | C743 | | nsp | nsp | CONNECTIVE CORD | SN95/PB5 , 0.6 | C3A206 |
| POWER | C744 | | nsp | 00MOA22505020 | ELECT CAP. | 2.2UF 50V | HCEA1HH2R2T |
| POWER | C745 | | nsp | 00MOA10605020 | ELECT CAP. | 10UF 50V | HCEA1HH100T |
| POWER | C746 | | nsp | 00MOA10605020 | ELECT CAP. | 10UF 50V | HCEA1HH100T |
| POWER | C747 | | nsp | 00MOA10605020 | ELECT CAP. | 10UF 50V | HCEA1HH100T |
| POWER | C748 | | nsp | nsp | CERAMIC CAP. | 0.01UF 50V ZF | CCKT1H103ZF |
| POWER | C749 | | nsp | 00MOA10701620 | ELECT CAP. | 100UF 16V | HCEA1CH101T |
| POWER | C751 | | nsp | 00MOA47505020 | ELECT CAP. | 4.7UF 50V | HCEA1HH4R7T |
| POWER | C752 | | nsp | 00MOA10605020 | ELECT CAP. | 10UF 50V | HCEA1HH100T |
| POWER | C753 | | nsp | 00MOA10701620 | ELECT CAP. | 100UF 16V | HCEA1CH101T |
| POWER | C754 | | nsp | nsp | CERAMIC CAP. | 0.01UF 50V ZF | CCKT1H103ZF |
| POWER | C755 | | nsp | nsp | CERAMIC CAP. | 47PF 50V JC | CCCT1H470JC |
| POWER | C756 | | nsp | nsp | CERAMIC CAP. | 0.01UF 50V ZF | CCKT1H103ZF |
| POWER | C757 | | nsp | 00MOA10701620 | ELECT CAP. | 100UF 16V | HCEA1CH101T |
| POWER | C758 | | nsp | 00MOA10701620 | ELECT CAP. | 100UF 16V | HCEA1CH101T |
| POWER | C759 | | nsp | nsp | CERAMIC CAP. | 0.01UF 50V ZF | CCKT1H103ZF |
| POWER | C760 | | nsp | nsp | CERAMIC CAP. | 47PF 50V JC | CCCT1H470JC |
| POWER | C761 | | nsp | nsp | CERAMIC CAP. | 0.01UF 50V ZF | CCKT1H103ZF |
| POWER | C762 | | nsp | 00MOA10701620 | ELECT CAP. | 100UF 16V | HCEA1CH101T |
| POWER | C763 | | nsp | 00MOA10701620 | ELECT CAP. | 100UF 16V | HCEA1CH101T |
| POWER | C764 | | nsp | nsp | CERAMIC CAP. | 0.01UF 50V ZF | CCKT1H103ZF |
| POWER | C765 | | nsp | nsp | CERAMIC CAP. | 47PF 50V JC | CCCT1H470JC |
| POWER | C766 | | nsp | nsp | CERAMIC CAP. | 0.01UF 50V ZF | CCKT1H103ZF |
| POWER | C767 | | nsp | 00MOA10701620 | ELECT CAP. | 100UF 16V | HCEA1CH101T |
| POWER | C768 | | nsp | nsp | CERAMIC CAP. | 1200PF 50V KB | CCKT1H122KB |
| POWER | C769 | | nsp | 00MOA10505020 | ELECT CAP. | 1UF 50V | HCEA1HH1R0T |
| POWER | C770 | | nsp | nsp | CERAMIC CAP. | 0.01UF 50V ZF | CCKT1H103ZF |
| POWER | C771 | | nsp | 00MOA10701620 | ELECT CAP. | 100UF 16V | HCEA1CH101T |
| POWER | C773 | | nsp | nsp | CERAMIC CAP. | 24PF 50V JC | CCCT1H240JC |
| POWER | C774 | | nsp | nsp | CERAMIC CAP. | 22PF 50V JC | CCCT1H220JC |
| POWER | C775 | | nsp | 00MOA10505020 | ELECT CAP. | 1UF 50V | HCEA1HH1R0T |
| POWER | C776 | | nsp | nsp | CERAMIC CAP. | 0.01UF 50V ZF | CCKT1H103ZF |
| POWER | C777 | | nsp | nsp | CERAMIC CAP. | 30PF 50V JC | CCCT1H300JC |

NOTE : “nsp” PARTS IS LISTED FOR REFERENCE ONLY, MARANTZ WILL NOT SUPPLY THESE PARTS.

| P.C.B. NAME | POS. NO. | VERS. COLOR | PART NO. (FOR EUR) | PART NO. (MJI) | PART NAME | DESCRIPTION | |
|---|---|---|---|---|---|---|---|
| POWER | C778 | /L1G | nsp | nsp | CERAMIC CAP. | 30PF 50V JC | CCCT1H300JC |
| POWER | C778 | /N1B | nsp | nsp | CERAMIC CAP. | 27PF 50V JC | CCCT1H270JC |
| POWER | C778 | /N1G | nsp | nsp | CERAMIC CAP. | 27PF 50V JC | CCCT1H270JC |
| POWER | C778 | /N1S | nsp | nsp | CERAMIC CAP. | 27PF 50V JC | CCCT1H270JC |
| POWER | C778 | /U1B | nsp | nsp | CERAMIC CAP. | 30PF 50V JC | CCCT1H300JC |
| POWER | C779 | | nsp | 00MOA10605020 | ELECT CAP. | 10UF 50V | HCEA1HH100T |
| POWER | C780 | | nsp | nsp | CERAMIC CAP. | 47PF 50V JC | CCCT1H470JC |
| POWER | C781 | | nsp | nsp | CERAMIC CAP. | 1000PF 50V KB | CCKT1H102KB |
| POWER | C782 | | nsp | nsp | CERAMIC CAP. | 220PF 50V KB | CCKT1H221KB |
| POWER | C783 | | nsp | 00MOA10605020 | ELECT CAP. | 10UF 50V | HCEA1HH100T |
| POWER | C785 | | nsp | nsp | CERAMIC CAP. | 0.01UF 50V ZF | CCKT1H103ZF |
| POWER | C786 | | nsp | nsp | CERAMIC CAP. | 0.01UF 50V ZF | CCKT1H103ZF |
| POWER | C787 | | nsp | 00MOA10701620 | ELECT CAP. | 100UF 16V | HCEA1CH101T |
| POWER | C788 | | nsp | 00MOA10605020 | ELECT CAP. | 10UF 50V | HCEA1HH100T |
| POWER | C789 | | nsp | 00MOA10605020 | ELECT CAP. | 10UF 50V | HCEA1HH100T |
| POWER | C790 | | nsp | nsp | CERAMIC CAP. | 0.01UF 50V ZF | CCKT1H103ZF |
| POWER | C791 | | nsp | nsp | CERAMIC CAP. | 0.01UF 50V ZF | CCKT1H103ZF |
| POWER | C792 | | nsp | 00MOA10701620 | ELECT CAP. | 100UF 16V | HCEA1CH101T |
| POWER | C793 | | nsp | nsp | CERAMIC CAP. | 0.022UF 50V ZF | CCKT1H223ZF |
| POWER | C794 | | nsp | nsp | CERAMIC CAP. | 47PF 50V JC | CCCT1H470JC |
| POWER | C795 | | nsp | 00MOA10701620 | ELECT CAP. | 100UF 16V | HCEA1CH101T |
| POWER | C796 | | nsp | nsp | CERAMIC CAP. | 0.01UF 50V ZF | CCKT1H103ZF |
| POWER | C797 | | nsp | 00MOA10605020 | ELECT CAP. | 10UF 50V | HCEA1HH100T |
| POWER | C798 | | nsp | nsp | CERAMIC CAP. | 0.01UF 50V ZF | CCKT1H103ZF |
| POWER | C799 | | nsp | nsp | CERAMIC CAP. | 0.01UF 50V ZF | CCKT1H103ZF |
| POWER | C800 | | nsp | 00MOA10605020 | ELECT CAP. | 10UF 50V | HCEA1HH100T |
| POWER | C802 | | nsp | 00MOA10605020 | ELECT CAP. | 10UF 50V | HCEA1HH100T |
| POWER | C803 | | nsp | nsp | CERAMIC CAP. | 0.01UF 50V ZF | CCKT1H103ZF |
| POWER | C804 | | nsp | nsp | CERAMIC CAP. | 0.01UF 50V ZF | CCKT1H103ZF |
| POWER | C805 | | nsp | 00MOA10701620 | ELECT CAP. | 100UF 16V | HCEA1CH101T |
| POWER | C806 | | nsp | nsp | CERAMIC CAP. | 0.01UF 50V ZF | CCKT1H103ZF |
| POWER | C807 | | nsp | nsp | CERAMIC CAP. | 1000PF 50V KB | CCKT1H102KB |
| POWER | C808 | | nsp | nsp | CERAMIC CAP. | 50V 0.1UF | CCKT1H104ZF |
| POWER | C827 | | nsp | nsp | CERAMIC CAP. | 1000PF 50V KB | CCKT1H102KB |
| POWER | C828 | | nsp | nsp | CERAMIC CAP. | 0.01UF 50V ZF | CCKT1H103ZF |
| POWER | CN12 | | nsp | nsp | JACK | MOLEX53014-0510 | KJP05GA19ZM |
| POWER | CN17 | | nsp | nsp | JACK | MOLEX53014-0510 | KJP05GA19ZM |
| POWER | CN37 | | nsp | nsp | JACK | C.CABLE | KJP11GA117ZG |
| POWER | CN41 | | nsp | nsp | JACK | MOLEX53014-0610 | KJP06GA19ZM |
| POWER | CN61 | | nsp | nsp | JACK | MOLEX53014-0810 | KJP08GA19ZM |
| POWER | CN62 | | nsp | nsp | JACK | MOLEX53014-0710 | KJP07GA19ZM |
| POWER | CN63 | | nsp | nsp | JACK | MOLEX53014-0510 | KJP05GA19ZM |
| POWER | CN64 | | nsp | nsp | JACK | MOLEX53014-0510 | KJP05GA19ZM |
| POWER | CN65 | | nsp | nsp | JACK | GF102-13S-TS | KJP13GA117ZG |
| POWER | CN66 | | nsp | nsp | JACK | MOLEX 5267-04A | KJP04GA01ZM |
| POWER | CN67 | | nsp | nsp | JACK | A3963WV2-5P | CJP05GA148ZW |
| POWER | CN69 | | nsp | nsp | JACK | | KJP05GA98ZM |
| POWER | CN70 | | nsp | nsp | JACK | A3963WV2-7P | CJP07GA148ZW |
| POWER | CN81 | | nsp | nsp | JACK | MOLEX53014-0610 | KJP06GA19ZM |
| POWER | D601 | | nsp | 90M-HD201750R | DIODE | 1N4003 | KVD1N4003SRT |
| POWER | D602 | | nsp | 90M-HD201750R | DIODE | 1N4003 | KVD1N4003SRT |
| POWER | D603 | | nsp | 90M-HD201750R | DIODE | 1N4003 | KVD1N4003SRT |
| POWER | D604 | | nsp | 90M-HD201750R | DIODE | 1N4003 | KVD1N4003SRT |
| POWER | D605 | | nsp | 90M-HD201750R | DIODE | 1N4003 | KVD1N4003SRT |
| POWER | D606 | | nsp | 90M-HD201750R | DIODE | 1N4003 | KVD1N4003SRT |
| POWER | D607 | | nsp | 90M-HD201750R | DIODE | 1N4003 | KVD1N4003SRT |
| POWER | D608 | | nsp | 90M-HD201750R | DIODE | 1N4003 | KVD1N4003SRT |
| POWER | D609 | | nsp | 90M-HD201750R | DIODE | 1N4003 | KVD1N4003SRT |
| POWER | D610 | | nsp | 90M-HD201750R | DIODE | 1N4003 | KVD1N4003SRT |
| POWER | D611 | | nsp | 90M-HD201750R | DIODE | 1N4003 | KVD1N4003SRT |
| POWER | D612 | | nsp | 90M-HD201750R | DIODE | 1N4003 | KVD1N4003SRT |
| POWER | D613 | | nsp | 90M-HD201750R | DIODE | 1N4003 | KVD1N4003SRT |
| POWER | D614 | | nsp | 90M-HD201750R | DIODE | 1N4003 | KVD1N4003SRT |
| POWER | D615 | | 90M-HD302150R | 90M-HD302150R | ZENER DIODE | | HVDMTZJ6.8BT |
| POWER | D616 | | 90M-HD302190R | 90M-HD302190R | ZENER DIODE | | HVDMTZJ30BT |
| POWER | D617 | | nsp | nsp | CONNECTIVE CORD | SN95/PB5 , 0.6 | C3A206 |
| POWER | D618 | | nsp | 90M-HD201750R | DIODE | 1N4003 | KVD1N4003SRT |
| POWER | D619 | | nsp | 90M-HD201750R | DIODE | 1N4003 | KVD1N4003SRT |

NOTE : “nsp” PARTS IS LISTED FOR REFERENCE ONLY, MARANTZ WILL NOT SUPPLY THESE PARTS.

| P.C.B. NAME | POS. NO. | VERS. COLOR | PART NO. (FOR EUR) | PART NO. (MJI) | PART NAME | DESCRIPTION | |
|---|---|---|---|---|---|---|---|
| POWER | D620 | | nsp | 90M-HD201750R | DIODE | 1N4003 | KVD1N4003SRT |
| POWER | D621 | | nsp | 90M-HD201750R | DIODE | 1N4003 | KVD1N4003SRT |
| POWER | D623 | | nsp | 90M-HD201750R | DIODE | 1N4003 | KVD1N4003SRT |
| POWER | ▲ D631 | | 90M-HE200340R | 90M-HE200340R | DIODE | GBJ804 | HVDGBJ804 |
| POWER | D701 | | nsp | 00MHD20015210 | DIODE | 1SS133T-77 | HVD1SS133MT |
| POWER | D702 | | nsp | 00MHD20015210 | DIODE | 1SS133T-77 | HVD1SS133MT |
| POWER | D704 | | nsp | 00MHD20015210 | DIODE | 1SS133T-77 | HVD1SS133MT |
| POWER | D705 | | nsp | 90M-HD201750R | DIODE | 1N4003 | KVD1N4003SRT |
| POWER | D706 | | nsp | 00MHD20015210 | DIODE | 1SS133T-77 | HVD1SS133MT |
| POWER | D707 | | nsp | 00MHD20015210 | DIODE | 1SS133T-77 | HVD1SS133MT |
| POWER | ET01 | | nsp | nsp | TERMINAL | PLATE , EARTH | CNE75 |
| POWER | IC09 | | 90M-HC300560R | 90M-HC300560R | IC REG | | HVIMC7905C |
| POWER | IC61 | | 90M-HC300690R | 90M-HC300690R | IC REG | KIA278R05PI | HVIKIA278R05PI |
| POWER | IC62 | | 90M-HC300500R | 90M-HC300500R | IC REG | KA7805-ABTU | HVIMC7805C |
| POWER | IC63 | | 90M-HC300520R | 90M-HC300520R | IC REG | KA7812-ABTU | HVIMC7812C |
| POWER | IC64 | | 00MHC3991209F | 00MHC3991209F | IC REG | | HVINJM7912FA |
| POWER | IC71 | | 00MHC10227090 | 00MHC10227090 | IC | NJM2595D | HVINJM2595D |
| POWER | IC72 | | 00MHC10227090 | 00MHC10227090 | IC | NJM2595D | HVINJM2595D |
| POWER | IC73 | | 00MHC10227090 | 00MHC10227090 | IC | NJM2595D | HVINJM2595D |
| POWER | IC74 | | 90M-HC108400R | 90M-HC108400R | IC | NJM2535D | HVINJM2535D |
| POWER | IC75 | | 00MHC10185090 | 00MHC10185090 | IC | NJM2264D | HVINJM2264D |
| POWER | IC76 | | 00MHC10119090 | 00MHC10119090 | IC | NJM2244D | HVINJM2244D |
| POWER | IC77 | | 00MHC10119090 | 00MHC10119090 | IC | NJM2244D | HVINJM2244D |
| POWER | IC78 | | 00MHC10377030 | 00MHC10377030 | IC | LC74781-9013 | HVILC74781-9013 |
| POWER | IC79 | | 90M-HC108420R | 90M-HC108420R | IC | TC74HC4094AP | HVITC74HC4094AP |
| POWER | IC80 | | 90M-HC108420R | 90M-HC108420R | IC | TC74HC4094AP | HVITC74HC4094AP |
| POWER | J600 | | nsp | nsp | CONNECTIVE CORD | SN95/PB5 , 0.6 | C3A206 |
| POWER | J601 | | nsp | nsp | CONNECTIVE CORD | SN95/PB5 , 0.6 | C3A206 |
| POWER | J602 | | nsp | nsp | CONNECTIVE CORD | SN95/PB5 , 0.6 | C3A206 |
| POWER | J603 | | nsp | nsp | CONNECTIVE CORD | SN95/PB5 , 0.6 | C3A206 |
| POWER | J604 | | nsp | nsp | CONNECTIVE CORD | SN95/PB5 , 0.6 | C3A206 |
| POWER | J606 | | nsp | nsp | CONNECTIVE CORD | SN95/PB5 , 0.6 | C3A206 |
| POWER | J607 | | nsp | nsp | CONNECTIVE CORD | SN95/PB5 , 0.6 | C3A206 |
| POWER | J608 | | nsp | nsp | CONNECTIVE CORD | SN95/PB5 , 0.6 | C3A206 |
| POWER | J609 | | nsp | nsp | CONNECTIVE CORD | SN95/PB5 , 0.6 | C3A206 |
| POWER | J610 | | nsp | nsp | CONNECTIVE CORD | SN95/PB5 , 0.6 | C3A206 |
| POWER | J611 | | nsp | nsp | CONNECTIVE CORD | SN95/PB5 , 0.6 | C3A206 |
| POWER | J612 | | nsp | nsp | CONNECTIVE CORD | SN95/PB5 , 0.6 | C3A206 |
| POWER | J613 | | nsp | nsp | CONNECTIVE CORD | SN95/PB5 , 0.6 | C3A206 |
| POWER | J614 | | nsp | nsp | CONNECTIVE CORD | SN95/PB5 , 0.6 | C3A206 |
| POWER | J615 | | nsp | nsp | CONNECTIVE CORD | SN95/PB5 , 0.6 | C3A206 |
| POWER | J617 | | nsp | nsp | CONNECTIVE CORD | SN95/PB5 , 0.6 | C3A206 |
| POWER | J618 | | nsp | nsp | CONNECTIVE CORD | SN95/PB5 , 0.6 | C3A206 |
| POWER | J619 | | nsp | nsp | CONNECTIVE CORD | SN95/PB5 , 0.6 | C3A206 |
| POWER | J620 | | nsp | nsp | CONNECTIVE CORD | SN95/PB5 , 0.6 | C3A206 |
| POWER | J622 | | nsp | nsp | CONNECTIVE CORD | SN95/PB5 , 0.6 | C3A206 |
| POWER | J623 | | nsp | nsp | CONNECTIVE CORD | SN95/PB5 , 0.6 | C3A206 |
| POWER | J624 | | nsp | nsp | CONNECTIVE CORD | SN95/PB5 , 0.6 | C3A206 |
| POWER | J625 | | nsp | nsp | CONNECTIVE CORD | SN95/PB5 , 0.6 | C3A206 |
| POWER | J626 | | nsp | nsp | CONNECTIVE CORD | SN95/PB5 , 0.6 | C3A206 |
| POWER | J627 | | nsp | nsp | CONNECTIVE CORD | SN95/PB5 , 0.6 | C3A206 |
| POWER | J628 | | nsp | nsp | CONNECTIVE CORD | SN95/PB5 , 0.6 | C3A206 |
| POWER | J629 | | nsp | nsp | CONNECTIVE CORD | SN95/PB5 , 0.6 | C3A206 |
| POWER | J630 | | nsp | nsp | CONNECTIVE CORD | SN95/PB5 , 0.6 | C3A206 |
| POWER | J631 | | nsp | nsp | CONNECTIVE CORD | SN95/PB5 , 0.6 | C3A206 |
| POWER | J632 | | nsp | nsp | CONNECTIVE CORD | SN95/PB5 , 0.6 | C3A206 |
| POWER | J633 | | nsp | nsp | CONNECTIVE CORD | SN95/PB5 , 0.6 | C3A206 |
| POWER | J634 | | nsp | nsp | CONNECTIVE CORD | SN95/PB5 , 0.6 | C3A206 |
| POWER | J635 | | nsp | nsp | CONNECTIVE CORD | SN95/PB5 , 0.6 | C3A206 |
| POWER | J636 | | nsp | nsp | CONNECTIVE CORD | SN95/PB5 , 0.6 | C3A206 |
| POWER | J637 | | nsp | nsp | CONNECTIVE CORD | SN95/PB5 , 0.6 | C3A206 |
| POWER | J638 | | nsp | nsp | CONNECTIVE CORD | SN95/PB5 , 0.6 | C3A206 |
| POWER | J640 | | nsp | nsp | CONNECTIVE CORD | SN95/PB5 , 0.6 | C3A206 |
| POWER | J641 | | nsp | nsp | CONNECTIVE CORD | SN95/PB5 , 0.6 | C3A206 |
| POWER | J643 | | nsp | nsp | CONNECTIVE CORD | SN95/PB5 , 0.6 | C3A206 |
| POWER | J644 | | nsp | nsp | CONNECTIVE CORD | SN95/PB5 , 0.6 | C3A206 |
| POWER | J645 | | nsp | nsp | CONNECTIVE CORD | SN95/PB5 , 0.6 | C3A206 |
| POWER | J646 | | nsp | nsp | CONNECTIVE CORD | SN95/PB5 , 0.6 | C3A206 |

NOTE : “nsp” PARTS IS LISTED FOR REFERENCE ONLY, MARANTZ WILL NOT SUPPLY THESE PARTS.

| P.C.B. NAME | POS. NO. | VERS. COLOR | PART NO. (FOR EUR) | PART NO. (MJI) | PART NAME | DESCRIPTION |
|---|---|---|---|---|---|---|
| POWER | J647 | | nsp | nsp | CONNECTIVE CORD | SN95/PB5 , 0.6 C3A206 |
| POWER | J648 | | nsp | nsp | CONNECTIVE CORD | SN95/PB5 , 0.6 C3A206 |
| POWER | J649 | | nsp | nsp | CONNECTIVE CORD | SN95/PB5 , 0.6 C3A206 |
| POWER | J650 | | nsp | nsp | CONNECTIVE CORD | SN95/PB5 , 0.6 C3A206 |
| POWER | J651 | | nsp | nsp | CONNECTIVE CORD | SN95/PB5 , 0.6 C3A206 |
| POWER | J652 | | nsp | nsp | CONNECTIVE CORD | SN95/PB5 , 0.6 C3A206 |
| POWER | J653 | | nsp | nsp | CONNECTIVE CORD | SN95/PB5 , 0.6 C3A206 |
| POWER | J657 | | nsp | nsp | CONNECTIVE CORD | SN95/PB5 , 0.6 C3A206 |
| POWER | J658 | | nsp | nsp | CONNECTIVE CORD | SN95/PB5 , 0.6 C3A206 |
| POWER | J659 | | nsp | nsp | CONNECTIVE CORD | SN95/PB5 , 0.6 C3A206 |
| POWER | J660 | | nsp | nsp | CONNECTIVE CORD | SN95/PB5 , 0.6 C3A206 |
| POWER | J661 | | nsp | nsp | CONNECTIVE CORD | SN95/PB5 , 0.6 C3A206 |
| POWER | J662 | | nsp | nsp | CONNECTIVE CORD | SN95/PB5 , 0.6 C3A206 |
| POWER | J663 | | nsp | nsp | CONNECTIVE CORD | SN95/PB5 , 0.6 C3A206 |
| POWER | J664 | | nsp | nsp | CONNECTIVE CORD | SN95/PB5 , 0.6 C3A206 |
| POWER | J665 | | nsp | nsp | CONNECTIVE CORD | SN95/PB5 , 0.6 C3A206 |
| POWER | J667 | | nsp | nsp | CONNECTIVE CORD | SN95/PB5 , 0.6 C3A206 |
| POWER | J668 | | nsp | nsp | CONNECTIVE CORD | SN95/PB5 , 0.6 C3A206 |
| POWER | J669 | | nsp | nsp | CONNECTIVE CORD | SN95/PB5 , 0.6 C3A206 |
| POWER | J670 | | nsp | nsp | CONNECTIVE CORD | SN95/PB5 , 0.6 C3A206 |
| POWER | J671 | | nsp | nsp | CONNECTIVE CORD | SN95/PB5 , 0.6 C3A206 |
| POWER | J672 | | nsp | nsp | CONNECTIVE CORD | SN95/PB5 , 0.6 C3A206 |
| POWER | J673 | | nsp | nsp | CONNECTIVE CORD | SN95/PB5 , 0.6 C3A206 |
| POWER | J674 | | nsp | nsp | CONNECTIVE CORD | SN95/PB5 , 0.6 C3A206 |
| POWER | J675 | | nsp | nsp | CONNECTIVE CORD | SN95/PB5 , 0.6 C3A206 |
| POWER | J676 | | nsp | nsp | CONNECTIVE CORD | SN95/PB5 , 0.6 C3A206 |
| POWER | J677 | | nsp | nsp | CONNECTIVE CORD | SN95/PB5 , 0.6 C3A206 |
| POWER | J678 | | nsp | nsp | CONNECTIVE CORD | SN95/PB5 , 0.6 C3A206 |
| POWER | J679 | | nsp | nsp | CONNECTIVE CORD | SN95/PB5 , 0.6 C3A206 |
| POWER | J680 | | nsp | nsp | CONNECTIVE CORD | SN95/PB5 , 0.6 C3A206 |
| POWER | J681 | | nsp | nsp | CONNECTIVE CORD | SN95/PB5 , 0.6 C3A206 |
| POWER | J682 | | nsp | nsp | CONNECTIVE CORD | SN95/PB5 , 0.6 C3A206 |
| POWER | J683 | | nsp | nsp | CONNECTIVE CORD | SN95/PB5 , 0.6 C3A206 |
| POWER | J685 | | nsp | nsp | CONNECTIVE CORD | SN95/PB5 , 0.6 C3A206 |
| POWER | J686 | | nsp | nsp | CONNECTIVE CORD | SN95/PB5 , 0.6 C3A206 |
| POWER | J687 | | nsp | nsp | CONNECTIVE CORD | SN95/PB5 , 0.6 C3A206 |
| POWER | J688 | | nsp | nsp | CONNECTIVE CORD | SN95/PB5 , 0.6 C3A206 |
| POWER | J689 | | nsp | nsp | CONNECTIVE CORD | SN95/PB5 , 0.6 C3A206 |
| POWER | J690 | | nsp | nsp | CONNECTIVE CORD | SN95/PB5 , 0.6 C3A206 |
| POWER | J691 | | nsp | nsp | CONNECTIVE CORD | SN95/PB5 , 0.6 C3A206 |
| POWER | J692 | | nsp | nsp | CONNECTIVE CORD | SN95/PB5 , 0.6 C3A206 |
| POWER | J693 | | nsp | nsp | CONNECTIVE CORD | SN95/PB5 , 0.6 C3A206 |
| POWER | J694 | | nsp | nsp | CONNECTIVE CORD | SN95/PB5 , 0.6 C3A206 |
| POWER | J695 | | nsp | nsp | CONNECTIVE CORD | SN95/PB5 , 0.6 C3A206 |
| POWER | J700 | | nsp | nsp | CONNECTIVE CORD | SN95/PB5 , 0.6 C3A206 |
| POWER | J701 | | nsp | nsp | CONNECTIVE CORD | SN95/PB5 , 0.6 C3A206 |
| POWER | J702 | | nsp | nsp | CONNECTIVE CORD | SN95/PB5 , 0.6 C3A206 |
| POWER | J703 | | nsp | nsp | CONNECTIVE CORD | SN95/PB5 , 0.6 C3A206 |
| POWER | J704 | | nsp | nsp | CONNECTIVE CORD | SN95/PB5 , 0.6 C3A206 |
| POWER | J705 | | nsp | nsp | CONNECTIVE CORD | SN95/PB5 , 0.6 C3A206 |
| POWER | J706 | | nsp | nsp | CONNECTIVE CORD | SN95/PB5 , 0.6 C3A206 |
| POWER | J707 | | nsp | nsp | CONNECTIVE CORD | SN95/PB5 , 0.6 C3A206 |
| POWER | J708 | | nsp | nsp | CONNECTIVE CORD | SN95/PB5 , 0.6 C3A206 |
| POWER | J709 | | nsp | nsp | CONNECTIVE CORD | SN95/PB5 , 0.6 C3A206 |
| POWER | J710 | | nsp | nsp | CONNECTIVE CORD | SN95/PB5 , 0.6 C3A206 |
| POWER | J711 | | nsp | nsp | CONNECTIVE CORD | SN95/PB5 , 0.6 C3A206 |
| POWER | J712 | | nsp | nsp | CONNECTIVE CORD | SN95/PB5 , 0.6 C3A206 |
| POWER | J713 | | nsp | nsp | CONNECTIVE CORD | SN95/PB5 , 0.6 C3A206 |
| POWER | J714 | | nsp | nsp | CONNECTIVE CORD | SN95/PB5 , 0.6 C3A206 |
| POWER | J715 | | nsp | nsp | CONNECTIVE CORD | SN95/PB5 , 0.6 C3A206 |
| POWER | J716 | | nsp | nsp | CONNECTIVE CORD | SN95/PB5 , 0.6 C3A206 |
| POWER | J717 | | nsp | nsp | CONNECTIVE CORD | SN95/PB5 , 0.6 C3A206 |
| POWER | J718 | | nsp | nsp | CONNECTIVE CORD | SN95/PB5 , 0.6 C3A206 |
| POWER | J719 | | nsp | nsp | CONNECTIVE CORD | SN95/PB5 , 0.6 C3A206 |
| POWER | J720 | | nsp | nsp | CONNECTIVE CORD | SN95/PB5 , 0.6 C3A206 |
| POWER | J721 | | nsp | nsp | CONNECTIVE CORD | SN95/PB5 , 0.6 C3A206 |
| POWER | J722 | | nsp | nsp | CONNECTIVE CORD | SN95/PB5 , 0.6 C3A206 |
| POWER | J723 | | nsp | nsp | CONNECTIVE CORD | SN95/PB5 , 0.6 C3A206 |

NOTE : “nsp” PARTS IS LISTED FOR REFERENCE ONLY, MARANTZ WILL NOT SUPPLY THESE PARTS.

| P.C.B. NAME | POS. NO. | VERS. COLOR | PART NO. (FOR EUR) | PART NO. (MJI) | PART NAME | DESCRIPTION |
|---|---|---|---|---|---|---|
| POWER | J724 | | nsp | nsp | CONNECTIVE CORD | SN95/PB5 , 0.6 C3A206 |
| POWER | J725 | | nsp | nsp | CONNECTIVE CORD | SN95/PB5 , 0.6 C3A206 |
| POWER | J726 | | nsp | nsp | CONNECTIVE CORD | SN95/PB5 , 0.6 C3A206 |
| POWER | J727 | | nsp | nsp | CONNECTIVE CORD | SN95/PB5 , 0.6 C3A206 |
| POWER | J728 | | nsp | nsp | CONNECTIVE CORD | SN95/PB5 , 0.6 C3A206 |
| POWER | J729 | | nsp | nsp | CONNECTIVE CORD | SN95/PB5 , 0.6 C3A206 |
| POWER | J730 | | nsp | nsp | CONNECTIVE CORD | SN95/PB5 , 0.6 C3A206 |
| POWER | J731 | | nsp | nsp | CONNECTIVE CORD | SN95/PB5 , 0.6 C3A206 |
| POWER | J732 | | nsp | nsp | CONNECTIVE CORD | SN95/PB5 , 0.6 C3A206 |
| POWER | J733 | | nsp | nsp | CONNECTIVE CORD | SN95/PB5 , 0.6 C3A206 |
| POWER | J734 | | nsp | nsp | CONNECTIVE CORD | SN95/PB5 , 0.6 C3A206 |
| POWER | J735 | | nsp | nsp | CONNECTIVE CORD | SN95/PB5 , 0.6 C3A206 |
| POWER | J736 | | nsp | nsp | CONNECTIVE CORD | SN95/PB5 , 0.6 C3A206 |
| POWER | J737 | | nsp | nsp | CONNECTIVE CORD | SN95/PB5 , 0.6 C3A206 |
| POWER | J738 | | nsp | nsp | CONNECTIVE CORD | SN95/PB5 , 0.6 C3A206 |
| POWER | J739 | | nsp | nsp | CONNECTIVE CORD | SN95/PB5 , 0.6 C3A206 |
| POWER | J741 | | nsp | nsp | CONNECTIVE CORD | SN95/PB5 , 0.6 C3A206 |
| POWER | J742 | | nsp | nsp | CONNECTIVE CORD | SN95/PB5 , 0.6 C3A206 |
| POWER | J743 | | nsp | nsp | CONNECTIVE CORD | SN95/PB5 , 0.6 C3A206 |
| POWER | J744 | | nsp | nsp | CONNECTIVE CORD | SN95/PB5 , 0.6 C3A206 |
| POWER | J745 | | nsp | nsp | CONNECTIVE CORD | SN95/PB5 , 0.6 C3A206 |
| POWER | J746 | | nsp | nsp | CONNECTIVE CORD | SN95/PB5 , 0.6 C3A206 |
| POWER | J747 | | nsp | nsp | CONNECTIVE CORD | SN95/PB5 , 0.6 C3A206 |
| POWER | J748 | | nsp | nsp | CONNECTIVE CORD | SN95/PB5 , 0.6 C3A206 |
| POWER | J749 | | nsp | nsp | CONNECTIVE CORD | SN95/PB5 , 0.6 C3A206 |
| POWER | J750 | | nsp | nsp | CONNECTIVE CORD | SN95/PB5 , 0.6 C3A206 |
| POWER | J751 | | nsp | nsp | CONNECTIVE CORD | SN95/PB5 , 0.6 C3A206 |
| POWER | J752 | | nsp | nsp | CONNECTIVE CORD | SN95/PB5 , 0.6 C3A206 |
| POWER | J753 | | nsp | nsp | CONNECTIVE CORD | SN95/PB5 , 0.6 C3A206 |
| POWER | J754 | | nsp | nsp | CONNECTIVE CORD | SN95/PB5 , 0.6 C3A206 |
| POWER | J755 | | nsp | nsp | CONNECTIVE CORD | SN95/PB5 , 0.6 C3A206 |
| POWER | J760 | | nsp | nsp | CONNECTIVE CORD | SN95/PB5 , 0.6 C3A206 |
| POWER | J761 | | nsp | nsp | CONNECTIVE CORD | SN95/PB5 , 0.6 C3A206 |
| POWER | J762 | | nsp | nsp | CONNECTIVE CORD | SN95/PB5 , 0.6 C3A206 |
| POWER | J763 | | nsp | nsp | CONNECTIVE CORD | SN95/PB5 , 0.6 C3A206 |
| POWER | J764 | | nsp | nsp | CONNECTIVE CORD | SN95/PB5 , 0.6 C3A206 |
| POWER | J765 | | nsp | nsp | CONNECTIVE CORD | SN95/PB5 , 0.6 C3A206 |
| POWER | J766 | | nsp | nsp | CONNECTIVE CORD | SN95/PB5 , 0.6 C3A206 |
| POWER | J767 | | nsp | nsp | CONNECTIVE CORD | SN95/PB5 , 0.6 C3A206 |
| POWER | J768 | | nsp | nsp | CONNECTIVE CORD | SN95/PB5 , 0.6 C3A206 |
| POWER | J769 | | nsp | nsp | CONNECTIVE CORD | SN95/PB5 , 0.6 C3A206 |
| POWER | J770 | | nsp | nsp | CONNECTIVE CORD | SN95/PB5 , 0.6 C3A206 |
| POWER | J771 | | nsp | nsp | CONNECTIVE CORD | SN95/PB5 , 0.6 C3A206 |
| POWER | J772 | | nsp | nsp | CONNECTIVE CORD | SN95/PB5 , 0.6 C3A206 |
| POWER | J773 | | nsp | nsp | CONNECTIVE CORD | SN95/PB5 , 0.6 C3A206 |
| POWER | J774 | | nsp | nsp | CONNECTIVE CORD | SN95/PB5 , 0.6 C3A206 |
| POWER | J775 | | nsp | nsp | CONNECTIVE CORD | SN95/PB5 , 0.6 C3A206 |
| POWER | J776 | | nsp | nsp | CONNECTIVE CORD | SN95/PB5 , 0.6 C3A206 |
| POWER | J777 | | nsp | nsp | CONNECTIVE CORD | SN95/PB5 , 0.6 C3A206 |
| POWER | J778 | | nsp | nsp | CONNECTIVE CORD | SN95/PB5 , 0.6 C3A206 |
| POWER | J779 | | nsp | nsp | CONNECTIVE CORD | SN95/PB5 , 0.6 C3A206 |
| POWER | J780 | | nsp | nsp | CONNECTIVE CORD | SN95/PB5 , 0.6 C3A206 |
| POWER | J781 | | nsp | nsp | CONNECTIVE CORD | SN95/PB5 , 0.6 C3A206 |
| POWER | J782 | | nsp | nsp | CONNECTIVE CORD | SN95/PB5 , 0.6 C3A206 |
| POWER | J783 | | nsp | nsp | CONNECTIVE CORD | SN95/PB5 , 0.6 C3A206 |
| POWER | J784 | | nsp | nsp | CONNECTIVE CORD | SN95/PB5 , 0.6 C3A206 |
| POWER | J785 | | nsp | nsp | CONNECTIVE CORD | SN95/PB5 , 0.6 C3A206 |
| POWER | J786 | | nsp | nsp | CONNECTIVE CORD | SN95/PB5 , 0.6 C3A206 |
| POWER | J787 | | nsp | nsp | CONNECTIVE CORD | SN95/PB5 , 0.6 C3A206 |
| POWER | J788 | | nsp | nsp | CONNECTIVE CORD | SN95/PB5 , 0.6 C3A206 |
| POWER | J789 | | nsp | nsp | CONNECTIVE CORD | SN95/PB5 , 0.6 C3A206 |
| POWER | J790 | | nsp | nsp | CONNECTIVE CORD | SN95/PB5 , 0.6 C3A206 |
| POWER | J791 | | nsp | nsp | CONNECTIVE CORD | SN95/PB5 , 0.6 C3A206 |
| POWER | J792 | | nsp | nsp | CONNECTIVE CORD | SN95/PB5 , 0.6 C3A206 |
| POWER | J793 | | nsp | nsp | CONNECTIVE CORD | SN95/PB5 , 0.6 C3A206 |
| POWER | J794 | | nsp | nsp | CONNECTIVE CORD | SN95/PB5 , 0.6 C3A206 |
| POWER | J795 | | nsp | nsp | CONNECTIVE CORD | SN95/PB5 , 0.6 C3A206 |
| POWER | J796 | | nsp | nsp | CONNECTIVE CORD | SN95/PB5 , 0.6 C3A206 |

NOTE : “nsp” PARTS IS LISTED FOR REFERENCE ONLY, MARANTZ WILL NOT SUPPLY THESE PARTS.

| P.C.B. NAME | POS. NO. | VERS. COLOR | PART NO. (FOR EUR) | PART NO. (MJI) | PART NAME | DESCRIPTION | |
|---|---|---|---|---|---|---|---|
| POWER | J797 | | nsp | nsp | CONNECTIVE CORD | SN95/PB5 , 0.6 | C3A206 |
| POWER | J798 | | nsp | nsp | CONNECTIVE CORD | SN95/PB5 , 0.6 | C3A206 |
| POWER | J799 | | nsp | nsp | CONNECTIVE CORD | SN95/PB5 , 0.6 | C3A206 |
| POWER | J801 | | nsp | nsp | CONNECTIVE CORD | SN95/PB5 , 0.6 | C3A206 |
| POWER | J802 | | nsp | nsp | CONNECTIVE CORD | SN95/PB5 , 0.6 | C3A206 |
| POWER | J803 | | nsp | nsp | CONNECTIVE CORD | SN95/PB5 , 0.6 | C3A206 |
| POWER | J804 | | nsp | nsp | CONNECTIVE CORD | SN95/PB5 , 0.6 | C3A206 |
| POWER | J805 | | nsp | nsp | CONNECTIVE CORD | SN95/PB5 , 0.6 | C3A206 |
| POWER | J806 | | nsp | nsp | CONNECTIVE CORD | SN95/PB5 , 0.6 | C3A206 |
| POWER | J807 | | nsp | nsp | CONNECTIVE CORD | SN95/PB5 , 0.6 | C3A206 |
| POWER | J808 | | nsp | nsp | CONNECTIVE CORD | SN95/PB5 , 0.6 | C3A206 |
| POWER | J809 | | nsp | nsp | CONNECTIVE CORD | SN95/PB5 , 0.6 | C3A206 |
| POWER | J810 | | nsp | nsp | CONNECTIVE CORD | SN95/PB5 , 0.6 | C3A206 |
| POWER | J811 | | nsp | nsp | CONNECTIVE CORD | SN95/PB5 , 0.6 | C3A206 |
| POWER | J812 | | nsp | nsp | CONNECTIVE CORD | SN95/PB5 , 0.6 | C3A206 |
| POWER | J813 | | nsp | nsp | CONNECTIVE CORD | SN95/PB5 , 0.6 | C3A206 |
| POWER | J814 | | nsp | nsp | CONNECTIVE CORD | SN95/PB5 , 0.6 | C3A206 |
| POWER | J815 | | nsp | nsp | CONNECTIVE CORD | SN95/PB5 , 0.6 | C3A206 |
| POWER | J816 | | nsp | nsp | CONNECTIVE CORD | SN95/PB5 , 0.6 | C3A206 |
| POWER | J817 | | nsp | nsp | CONNECTIVE CORD | SN95/PB5 , 0.6 | C3A206 |
| POWER | J818 | | nsp | nsp | CONNECTIVE CORD | SN95/PB5 , 0.6 | C3A206 |
| POWER | J819 | | nsp | nsp | CONNECTIVE CORD | SN95/PB5 , 0.6 | C3A206 |
| POWER | J820 | | nsp | nsp | CONNECTIVE CORD | SN95/PB5 , 0.6 | C3A206 |
| POWER | J821 | | nsp | nsp | CONNECTIVE CORD | SN95/PB5 , 0.6 | C3A206 |
| POWER | J822 | | nsp | nsp | CONNECTIVE CORD | SN95/PB5 , 0.6 | C3A206 |
| POWER | J823 | | nsp | nsp | CONNECTIVE CORD | SN95/PB5 , 0.6 | C3A206 |
| POWER | J824 | | nsp | nsp | CONNECTIVE CORD | SN95/PB5 , 0.6 | C3A206 |
| POWER | J825 | | nsp | nsp | CONNECTIVE CORD | SN95/PB5 , 0.6 | C3A206 |
| POWER | J827 | | nsp | nsp | CONNECTIVE CORD | SN95/PB5 , 0.6 | C3A206 |
| POWER | J830 | | nsp | nsp | CONNECTIVE CORD | SN95/PB5 , 0.6 | C3A206 |
| POWER | J832 | | nsp | nsp | CONNECTIVE CORD | SN95/PB5 , 0.6 | C3A206 |
| POWER | J833 | | nsp | nsp | CONNECTIVE CORD | SN95/PB5 , 0.6 | C3A206 |
| POWER | J834 | | nsp | nsp | CONNECTIVE CORD | SN95/PB5 , 0.6 | C3A206 |
| POWER | J835 | | nsp | nsp | CONNECTIVE CORD | SN95/PB5 , 0.6 | C3A206 |
| POWER | JC71 | | nsp | nsp | TERMINAL | 25053WS-06A02 | CJP06TT122ZP |
| POWER | JC72 | | nsp | nsp | TERMINAL | 25053WS-06A02 | CJP06TT122ZP |
| POWER | JC73 | | nsp | nsp | TERMINAL | 25053WS-06A02 | CJP06TT122ZP |
| POWER | JC74 | | nsp | nsp | JACK | C.CABLE | KJP11GA117ZG |
| POWER | JK61 | | 90M-YT003520R | 90M-YT003520R | TERMINAL | SPEAKER | CJJ5P020Z |
| POWER | JK62 | | 90M-YT004090R | 90M-YT004090R | TERMINAL | JB-602A-11 SPEAKER | CJJ5R010Z |
| POWER | JK63 | | 90M-YT004080R | 90M-YT004080R | TERMINAL | JB-405E-14 SPEAKER | CJJ5P024Z |
| POWER | JK71 | | 90M-YT002940R | 90M-YT002940R | TERMINAL | | CJJ4S010Z |
| POWER | JK72 | | 90M-YT002950R | 90M-YT002950R | TERMINAL | | CJJ4N043Z |
| POWER | JK73 | | 90M-YT002950R | 90M-YT002950R | TERMINAL | | CJJ4N043Z |
| POWER | JK74 | | 90M-YT003260R | 90M-YT003260R | TERMINAL | S-VIDEO (3P/H) | CJJ9S001Z |
| POWER | JK75 | | 90M-YT003250R | 90M-YT003250R | TERMINAL | S-VIDEO (2P/H) | CJJ9N001Z |
| POWER | JK76 | | 90M-YT003250R | 90M-YT003250R | TERMINAL | S-VIDEO (2P/H) | CJJ9N001Z |
| POWER | L701 | | nsp | nsp | COIL | 33UH | HLQ02C330JT |
| POWER | L702 | | nsp | nsp | COIL | 33UH | HLQ02C330JT |
| POWER | Q601 | | 90M-HT600040R | 90M-HT600040R | TRANSISTOR | | HVTKTA1267YT |
| POWER | Q602 | | 90M-HT600040R | 90M-HT600040R | TRANSISTOR | | HVTKTA1267YT |
| POWER | Q603 | | 90M-HT600040R | 90M-HT600040R | TRANSISTOR | | HVTKTA1267YT |
| POWER | Q604 | | 90M-HT600040R | 90M-HT600040R | TRANSISTOR | | HVTKTA1267YT |
| POWER | Q606 | | 90M-HT600040R | 90M-HT600040R | TRANSISTOR | | HVTKTA1267YT |
| POWER | Q607 | | 00MBA20001000 | 00MBA20001000 | TRANSISTOR | KRC102M | HVTKRC102MT |
| POWER | Q608 | | 00MBA20001000 | 00MBA20001000 | TRANSISTOR | KRC102M | HVTKRC102MT |
| POWER | Q609 | | 00MBA20001000 | 00MBA20001000 | TRANSISTOR | KRC102M | HVTKRC102MT |
| POWER | Q610 | | 00MBA20001000 | 00MBA20001000 | TRANSISTOR | KRC102M | HVTKRC102MT |
| POWER | Q611 | | 00MBA20001000 | 00MBA20001000 | TRANSISTOR | KRC102M | HVTKRC102MT |
| POWER | Q612 | | 90M-HT600040R | 90M-HT600040R | TRANSISTOR | | HVTKTA1267YT |
| POWER | Q613 | | 90M-HT800050R | 90M-HT800050R | TRANSISTOR | | HVTKTC3198YT |
| POWER | Q614 | | 90M-HT800050R | 90M-HT800050R | TRANSISTOR | | HVTKTC3198YT |
| POWER | Q615 | | 90M-HT600040R | 90M-HT600040R | TRANSISTOR | | HVTKTA1267YT |
| POWER | Q701 | | 90M-HT600040R | 90M-HT600040R | TRANSISTOR | | HVTKTA1267YT |
| POWER | Q702 | | 00MBA10001000 | 00MBA10001000 | TRANSISTOR | KRA102M | HVTKRA102MT |
| POWER | Q703 | | 00MHT30001000 | 00MHT30001000 | TRANSISTOR | | HVTKTC3199YT |
| POWER | Q704 | | 00MHT30001000 | 00MHT30001000 | TRANSISTOR | | HVTKTC3199YT |
| POWER | Q705 | /N1B | 00MBA20004000 | 00MBA20004000 | TRANSISTOR | KRC111M | HVTKRC111MT |

NOTE : “nsp” PARTS IS LISTED FOR REFERENCE ONLY, MARANTZ WILL NOT SUPPLY THESE PARTS.

| P.C.B. NAME | POS. NO. | VERS. COLOR | PART NO. (FOR EUR) | PART NO. (MJI) | PART NAME | DESCRIPTION | |
|---|---|---|---|---|---|---|---|
| POWER | Q705 | /N1G | 00MBA20004000 | 00MBA20004000 | TRANSISTOR | KRC111M | HVTKRC111MT |
| POWER | Q705 | /N1S | 00MBA20004000 | 00MBA20004000 | TRANSISTOR | KRC111M | HVTKRC111MT |
| POWER | Q706 | /N1B | 00MHT805501B0 | 00MHT805501B0 | TRANSISTOR | KTC2874B | HVTKTC2874BT |
| POWER | Q706 | /N1G | 00MHT805501B0 | 00MHT805501B0 | TRANSISTOR | KTC2874B | HVTKTC2874BT |
| POWER | Q706 | /N1S | 00MHT805501B0 | 00MHT805501B0 | TRANSISTOR | KTC2874B | HVTKTC2874BT |
| POWER | Q707 | /N1B | 00MBA10001000 | 00MBA10001000 | TRANSISTOR | KRA102M | HVTKRA102MT |
| POWER | Q707 | /N1G | 00MBA10001000 | 00MBA10001000 | TRANSISTOR | KRA102M | HVTKRA102MT |
| POWER | Q707 | /N1S | 00MBA10001000 | 00MBA10001000 | TRANSISTOR | KRA102M | HVTKRA102MT |
| POWER | Q708 | | 00MHT30001000 | 00MHT30001000 | TRANSISTOR | | HVTKTC3199YT |
| POWER | Q710 | | 00MBA20001000 | 00MBA20001000 | TRANSISTOR | KRC102M | HVTKRC102MT |
| POWER | Q711 | | 00MHT30001000 | 00MHT30001000 | TRANSISTOR | | HVTKTC3199YT |
| POWER | Q712 | | 00MHT30001000 | 00MHT30001000 | TRANSISTOR | | HVTKTC3199YT |
| POWER | Q713 | | 00MBA10001000 | 00MBA10001000 | TRANSISTOR | KRA102M | HVTKRA102MT |
| POWER | R600 | | nsp | nsp | RESISTOR | 10 OHM 1W J | KRG1SANJ100RT |
| POWER | R601 | | nsp | nsp | RESISTOR | 220 OHM 1/4W | CRD25TJ221T |
| POWER | R602 | | nsp | nsp | RESISTOR | 330 OHM 1/4W J | CRD25TJ331T |
| POWER | R603 | | nsp | nsp | RESISTOR | 220 OHM 1/4W | CRD25TJ221T |
| POWER | R604 | | nsp | nsp | RESISTOR | 330 OHM 1/4W J | CRD25TJ331T |
| POWER | R605 | | nsp | nsp | RESISTOR | 220 OHM 1/4W | CRD25TJ221T |
| POWER | R606 | | nsp | nsp | RESISTOR | 330 OHM 1/4W J | CRD25TJ331T |
| POWER | R607 | | nsp | nsp | RESISTOR | 220 OHM 1/4W | CRD25TJ221T |
| POWER | R608 | | nsp | nsp | RESISTOR | 330 OHM 1/4W J | CRD25TJ331T |
| POWER | R609 | | nsp | nsp | RESISTOR | 220 OHM 1/4W | CRD25TJ221T |
| POWER | R610 | | nsp | nsp | RESISTOR | 330 OHM 1/4W J | CRD25TJ331T |
| POWER | R611 | | nsp | nsp | RESISTOR | 10K OHM 1/5W J | CRD20TJ103T |
| POWER | R612 | | nsp | nsp | RESISTOR | 10K OHM 1/5W J | CRD20TJ103T |
| POWER | R613 | | nsp | nsp | RESISTOR | 10K OHM 1/5W J | CRD20TJ103T |
| POWER | R614 | | nsp | nsp | RESISTOR | 10K OHM 1/5W J | CRD20TJ103T |
| POWER | R615 | | nsp | nsp | RESISTOR | 10K OHM 1/5W J | CRD20TJ103T |
| POWER | R616 | | nsp | nsp | RESISTOR | 10K OHM 1/5W J | CRD20TJ103T |
| POWER | R617 | | nsp | nsp | RESISTOR | 10K OHM 1/5W J | CRD20TJ103T |
| POWER | R618 | | nsp | nsp | RESISTOR | 10K OHM 1/5W J | CRD20TJ103T |
| POWER | R619 | | nsp | nsp | RESISTOR | 10K OHM 1/5W J | CRD20TJ103T |
| POWER | R620 | | nsp | nsp | RESISTOR | 10K OHM 1/5W J | CRD20TJ103T |
| POWER | R621 | | nsp | nsp | RESISTOR | 10 OHM 1W J | KRG1SANJ100RT |
| POWER | R622 | | nsp | nsp | RESISTOR | 10 OHM 1W J | KRG1SANJ100RT |
| POWER | R623 | | nsp | nsp | RESISTOR | 10 OHM 1W J | KRG1SANJ100RT |
| POWER | R624 | | nsp | nsp | RESISTOR | 10 OHM 1W J | KRG1SANJ100RT |
| POWER | R625 | | nsp | nsp | RESISTOR | 10 OHM 1W J | KRG1SANJ100RT |
| POWER | R626 | | nsp | nsp | RESISTOR | 10 OHM 1W J | KRG1SANJ100RT |
| POWER | R627 | | nsp | nsp | RESISTOR | 330 OHM | CRG1ANJ331H |
| POWER | R628 | | nsp | nsp | RESISTOR | 330 OHM | CRG1ANJ331H |
| POWER | R631 | | nsp | nsp | RESISTOR | 150 OHM 1/4W J | CRD25TJ151T |
| POWER | R632 | | nsp | nsp | RESISTOR | 150 OHM 1/4W J | CRD25TJ151T |
| POWER | R633 | | nsp | nsp | RESISTOR | 15K OHM 1/5W J | CRD20TJ153T |
| POWER | R634 | | nsp | nsp | RESISTOR | 15K OHM 1/5W J | CRD20TJ153T |
| POWER | R635 | | nsp | nsp | RESISTOR | 15K OHM 1/5W J | CRD20TJ153T |
| POWER | R636 | | nsp | nsp | RESISTOR | 15K OHM 1/5W J | CRD20TJ153T |
| POWER | R637 | | nsp | nsp | RESISTOR | 10K OHM 1/5W J | CRD20TJ103T |
| POWER | R638 | | nsp | nsp | RESISTOR | 33K OHM 1/5W J | CRD20TJ333T |
| POWER | R639 | | nsp | nsp | RESISTOR | 100K OHM 1/5W J | CRD20TJ104T |
| POWER | R640 | | nsp | nsp | RESISTOR | 1 OHM | CRG1ANJ1R0H |
| POWER | R641 | | nsp | nsp | RESISTOR | 1 OHM | CRG1ANJ1R0H |
| POWER | R642 | | nsp | nsp | RESISTOR | 10K OHM 1/5W J | CRD20TJ103T |
| POWER | R643 | | nsp | nsp | RESISTOR | 10K OHM 1/5W J | CRD20TJ103T |
| POWER | R644 | | nsp | nsp | RESISTOR | 22K OHM 1/5W J | CRD20TJ223T |
| POWER | R645 | | nsp | nsp | RESISTOR | 22K OHM 1/5W J | CRD20TJ223T |
| POWER | R646 | | nsp | nsp | RESISTOR | 10K OHM 1/5W J | CRD20TJ103T |
| POWER | R647 | | nsp | nsp | RESISTOR | 1 OHM 1/4W | CRD25TJ1R0T |
| POWER | R648 | | nsp | nsp | RESISTOR | 2.2K OHM 1W J | KRG1SANJ222RT |
| POWER | R649 | | nsp | nsp | RESISTOR | 1.5K OHM 1W J | KRG1SANJ152RT |
| POWER | R650 | | nsp | nsp | RESISTOR | 100 OHM 1/4W | CRD25TJ101T |
| POWER | R651 | | nsp | nsp | RESISTOR | 100 OHM 1/4W | CRD25TJ101T |
| POWER | R652 | | nsp | nsp | CONNECTIVE CORD | SN95/PB5 , 0.6 | C3A206 |
| POWER | R653 | | 90M-NH000150R | 90M-NH000150R | FUSE RESISTOR | 0.15 OHM , 1W J | KRQ1AJR15H |
| POWER | R701 | | nsp | nsp | RESISTOR | 75 OHM 1/5W J | CRD20TJ750T |
| POWER | R702 | | nsp | nsp | CONNECTIVE CORD | SN95/PB5 , 0.6 | C3A206 |
| POWER | R703 | | nsp | nsp | RESISTOR | 75 OHM 1/5W J | CRD20TJ750T |

NOTE : “nsp” PARTS IS LISTED FOR REFERENCE ONLY, MARANTZ WILL NOT SUPPLY THESE PARTS.

| P.C.B. NAME | POS. NO. | VERS. COLOR | PART NO. (FOR EUR) | PART NO. (MJI) | PART NAME | DESCRIPTION | |
|---|---|---|---|---|---|---|---|
| POWER | R704 | | nsp | nsp | CONNECTIVE CORD | SN95/PB5 , 0.6 | C3A206 |
| POWER | R705 | | nsp | nsp | RESISTOR | 75 OHM 1/5W J | CRD20TJ750T |
| POWER | R706 | | nsp | nsp | CONNECTIVE CORD | SN95/PB5 , 0.6 | C3A206 |
| POWER | R707 | | nsp | nsp | RESISTOR | 75 OHM 1/5W J | CRD20TJ750T |
| POWER | R708 | | nsp | nsp | RESISTOR | 75 OHM 1/5W J | CRD20TJ750T |
| POWER | R709 | | nsp | nsp | CONNECTIVE CORD | SN95/PB5 , 0.6 | C3A206 |
| POWER | R710 | | nsp | nsp | RESISTOR | 75 OHM 1/5W J | CRD20TJ750T |
| POWER | R711 | | nsp | nsp | RESISTOR | 75 OHM 1/5W J | CRD20TJ750T |
| POWER | R712 | | nsp | nsp | RESISTOR | 75 OHM 1/5W J | CRD20TJ750T |
| POWER | R713 | | nsp | nsp | RESISTOR | 75 OHM 1/5W J | CRD20TJ750T |
| POWER | R714 | | nsp | nsp | CONNECTIVE CORD | SN95/PB5 , 0.6 | C3A206 |
| POWER | R715 | | nsp | nsp | RESISTOR | 75 OHM 1/5W J | CRD20TJ750T |
| POWER | R716 | | nsp | nsp | RESISTOR | 75 OHM 1/5W J | CRD20TJ750T |
| POWER | R717 | | nsp | nsp | CONNECTIVE CORD | SN95/PB5 , 0.6 | C3A206 |
| POWER | R718 | | nsp | nsp | RESISTOR | 75 OHM 1/5W J | CRD20TJ750T |
| POWER | R719 | | nsp | nsp | RESISTOR | 75 OHM 1/5W J | CRD20TJ750T |
| POWER | R720 | | nsp | nsp | CONNECTIVE CORD | SN95/PB5 , 0.6 | C3A206 |
| POWER | R721 | | nsp | nsp | RESISTOR | 75 OHM 1/5W J | CRD20TJ750T |
| POWER | R722 | | nsp | nsp | RESISTOR | 75 OHM 1/5W J | CRD20TJ750T |
| POWER | R723 | | nsp | nsp | RESISTOR | 75 OHM 1/5W J | CRD20TJ750T |
| POWER | R724 | | nsp | nsp | RESISTOR | 75 OHM 1/5W J | CRD20TJ750T |
| POWER | R725 | | nsp | nsp | CONNECTIVE CORD | SN95/PB5 , 0.6 | C3A206 |
| POWER | R726 | | nsp | nsp | RESISTOR | 75 OHM 1/5W J | CRD20TJ750T |
| POWER | R727 | | nsp | nsp | RESISTOR | 75 OHM 1/5W J | CRD20TJ750T |
| POWER | R728 | | nsp | nsp | RESISTOR | 75 OHM 1/5W J | CRD20TJ750T |
| POWER | R729 | | nsp | nsp | RESISTOR | 75 OHM 1/5W J | CRD20TJ750T |
| POWER | R730 | | nsp | nsp | RESISTOR | 220 KOHM 1/5W J | CRD20TJ224T |
| POWER | R731 | | nsp | nsp | RESISTOR | 10 OHM 1/5W J | CRD20TJ100T |
| POWER | R732 | | nsp | nsp | RESISTOR | 220 OHM 1/5W J | CRD20TJ221T |
| POWER | R733 | | nsp | nsp | RESISTOR | 10K OHM 1/5W J | CRD20TJ103T |
| POWER | R734 | | nsp | nsp | RESISTOR | 1M OHM 1/5W J | CRD20TJ105T |
| POWER | R735 | | nsp | nsp | RESISTOR | 1M OHM 1/5W J | CRD20TJ105T |
| POWER | R736 | | nsp | nsp | RESISTOR | 100K OHM 1/5W J | CRD20TJ104T |
| POWER | R737 | | nsp | nsp | RESISTOR | 1M OHM 1/5W J | CRD20TJ105T |
| POWER | R738 | | nsp | nsp | RESISTOR | 10K OHM 1/5W J | CRD20TJ103T |
| POWER | R739 | | nsp | nsp | RESISTOR | 12K OHM 1/5W J | CRD20TJ123T |
| POWER | R740 | | nsp | nsp | RESISTOR | 470 OHM 1/5W J | CRD20TJ471T |
| POWER | R741 | | nsp | nsp | RESISTOR | 75 OHM 1/5W J | CRD20TJ750T |
| POWER | R742 | | nsp | nsp | RESISTOR | 75 OHM 1/5W J | CRD20TJ750T |
| POWER | R743 | | nsp | nsp | RESISTOR | 75 OHM 1/5W J | CRD20TJ750T |
| POWER | R744 | | nsp | nsp | RESISTOR | 220 OHM 1/5W J | CRD20TJ221T |
| POWER | R745 | | nsp | nsp | CONNECTIVE CORD | SN95/PB5 , 0.6 | C3A206 |
| POWER | R746 | | nsp | nsp | RESISTOR | 1M OHM 1/5W J | CRD20TJ105T |
| POWER | R747 | /L1G | nsp | nsp | CONNECTIVE CORD | SN95/PB5 , 0.6 | C3A206 |
| POWER | R747 | /U1B | nsp | nsp | CONNECTIVE CORD | SN95/PB5 , 0.6 | C3A206 |
| POWER | R750 | | nsp | nsp | RESISTOR | 10K OHM 1/5W J | CRD20TJ103T |
| POWER | R752 | | nsp | nsp | RESISTOR | 75 OHM 1/5W J | CRD20TJ750T |
| POWER | R753 | | nsp | nsp | RESISTOR | 220 OHM 1/5W J | CRD20TJ221T |
| POWER | R756 | | nsp | nsp | CONNECTIVE CORD | SN95/PB5 , 0.6 | C3A206 |
| POWER | R758 | | nsp | nsp | RESISTOR | 4.7K OHM 1/5W J | CRD20TJ472T |
| POWER | R759 | | nsp | nsp | RESISTOR | 3.3K OHM 1/5W J | CRD20TJ332T |
| POWER | R761 | | nsp | nsp | RESISTOR | 100K OHM 1/5W J | CRD20TJ104T |
| POWER | R762 | | nsp | nsp | RESISTOR | 1M OHM 1/5W J | CRD20TJ105T |
| POWER | R763 | | nsp | nsp | RESISTOR | 3.3K OHM 1/5W J | CRD20TJ332T |
| POWER | R764 | | nsp | nsp | RESISTOR | 1M OHM 1/5W J | CRD20TJ105T |
| POWER | R765 | | nsp | nsp | RESISTOR | 1M OHM 1/5W J | CRD20TJ105T |
| POWER | R766 | | nsp | nsp | RESISTOR | 1M OHM 1/5W J | CRD20TJ105T |
| POWER | R767 | | nsp | nsp | RESISTOR | 1M OHM 1/5W J | CRD20TJ105T |
| POWER | R768 | | nsp | nsp | RESISTOR | 4.7K OHM 1/5W J | CRD20TJ472T |
| POWER | R769 | | nsp | nsp | RESISTOR | 1K OHM 1/5W J | CRD20TJ102T |
| POWER | R770 | | nsp | nsp | RESISTOR | 10K OHM 1/5W J | CRD20TJ103T |
| POWER | R771 | | nsp | nsp | RESISTOR | 56 OHM 1/5W J | CRD20TJ560T |
| POWER | R772 | | nsp | nsp | RESISTOR | 1K OHM 1/5W J | CRD20TJ102T |
| POWER | R773 | | nsp | nsp | RESISTOR | 10K OHM 1/5W J | CRD20TJ103T |
| POWER | R774 | | nsp | nsp | RESISTOR | 1K OHM 1/5W J | CRD20TJ102T |
| POWER | R775 | | nsp | nsp | CONNECTIVE CORD | SN95/PB5 , 0.6 | C3A206 |
| POWER | R776 | | nsp | nsp | RESISTOR | 1M OHM 1/5W J | CRD20TJ105T |
| POWER | R777 | | nsp | nsp | RESISTOR | 1M OHM 1/5W J | CRD20TJ105T |

NOTE : “nsp” PARTS IS LISTED FOR REFERENCE ONLY, MARANTZ WILL NOT SUPPLY THESE PARTS.

| P.C.B. NAME | POS. NO. | VERS. COLOR | PART NO. (FOR EUR) | PART NO. (MJI) | PART NAME | DESCRIPTION | |
|---|---|---|---|---|---|---|---|
| POWER | R778 | | nsp | nsp | RESISTOR | 1M OHM 1/5W J | CRD20TJ105T |
| POWER | R781 | | nsp | nsp | RESISTOR | 10K OHM 1/5W J | CRD20TJ103T |
| POWER | R782 | | nsp | nsp | RESISTOR | 100 OHM 1/5W J | CRD20TJ101T |
| POWER | R783 | | nsp | nsp | RESISTOR | 10K OHM 1/5W J | CRD20TJ103T |
| POWER | R791 | | nsp | nsp | RESISTOR | 100 OHM 1/5W J | CRD20TJ101T |
| POWER | R792 | | nsp | nsp | RESISTOR | 10K OHM 1/5W J | CRD20TJ103T |
| POWER | R795 | | nsp | nsp | RESISTOR | 3.3K OHM 1/5W J | CRD20TJ332T |
| POWER | R799 | /N1B | nsp | nsp | RESISTOR | 10K OHM 1/5W J | CRD20TJ103T |
| POWER | R799 | /N1G | nsp | nsp | RESISTOR | 10K OHM 1/5W J | CRD20TJ103T |
| POWER | R799 | /N1S | nsp | nsp | RESISTOR | 10K OHM 1/5W J | CRD20TJ103T |
| POWER | RJ21 | | nsp | nsp | RESISTOR | 10K OHM 1/5W J | CRD20TJ103T |
| POWER | RY61 | | 00MLY20240490 | 00MLY20240490 | RELAY | 5GPA-28 DC24 | HSL3B013ZE |
| POWER | RY62 | | 00MLY20240490 | 00MLY20240490 | RELAY | 5GPA-28 DC24 | HSL3B013ZE |
| POWER | RY63 | | 00MLY20240490 | 00MLY20240490 | RELAY | 5GPA-28 DC24 | HSL3B013ZE |
| POWER | RY64 | | 00MLY20240490 | 00MLY20240490 | RELAY | 5GPA-28 DC24 | HSL3B013ZE |
| POWER | RY65 | | 00MLY20240510 | 00MLY20240510 | RELAY | OSA-SS-224DM3 | HSL4B017ZU |
| POWER | ⚠ RY66 | | 00MLY20240520 | 00MLY20240520 | RELAY | PCLH-203D1SP | HSL4B018ZU |
| POWER | X701 | | 90M-JX001080R | 90M-JX001080R | CRYSTAL | | HOX14318D220F |
| POWER | X702 | /N1B | 90M-JX001090R | 90M-JX001090R | CRYSTAL | | HOX17744D220F |
| POWER | X702 | /N1G | 90M-JX001090R | 90M-JX001090R | CRYSTAL | | HOX17744D220F |
| POWER | X702 | /N1S | 90M-JX001090R | 90M-JX001090R | CRYSTAL | | HOX17744D220F |
| | | | | | **VIDEO CONVERTER PCB (CUP11709Z)** | | |
| VIDEO | BN71 | | nsp | nsp | JAC | MOLEX42140-2206 | KJP06HA37ZM |
| VIDEO | BN72 | | nsp | nsp | JACK | MOLEX42140-2206 | KJP06HA37ZM |
| VIDEO | BN73 | | nsp | nsp | JACK | MOLEX42140-2206 | KJP06HA37ZM |
| VIDEO | BN74 | | nsp | nsp | JACK | C.CABLE | KJP11GA117ZG |
| VIDEO | C100 | | nsp | 00MOA10605020 | ELECT CAP. | 10UF 50V | HCEA1HH100T |
| VIDEO | C101 | | nsp | 00MDK96103300 | CERAMIC CAP. | 0.01UF 50V | HCUS1H103KC |
| VIDEO | C102 | | nsp | 00MOA10605020 | ELECT CAP. | 10UF 50V | HCEA1HH100T |
| VIDEO | C103 | | nsp | 00MDK96103300 | CERAMIC CAP. | 0.01UF 50V | HCUS1H103KC |
| VIDEO | C104 | | nsp | 00MOA10605020 | ELECT CAP. | 10UF 50V | HCEA1HH100T |
| VIDEO | C105 | | nsp | 00MOA10605020 | ELECT CAP. | 10UF 50V | HCEA1HH100T |
| VIDEO | C106 | | nsp | 00MOA10605020 | ELECT CAP. | 10UF 50V | HCEA1HH100T |
| VIDEO | C107 | | nsp | 00MOA10605020 | ELECT CAP. | 10UF 50V | HCEA1HH100T |
| VIDEO | C108 | | nsp | 00MDK96103300 | CERAMIC CAP. | 0.01UF 50V | HCUS1H103KC |
| VIDEO | C109 | | nsp | 00MOA10701620 | ELECT CAP. | 100UF 16V | HCEA1CH101T |
| VIDEO | C110 | | nsp | 00MDK96104300 | CERAMIC CAP. | 0.1UF ZF1608 SIZE | HCUS1E104ZF |
| VIDEO | C111 | | nsp | 00MDK96104300 | CERAMIC CAP. | 0.1UF ZF1608 SIZE | HCUS1E104ZF |
| VIDEO | C112 | | nsp | 00MOA10605020 | ELECT CAP. | 10UF 50V | HCEA1HH100T |
| VIDEO | C113 | | nsp | 00MDD95220300 | CERAMIC CAP. | 22PF 50V | HCUS1H220JA |
| VIDEO | C114 | | nsp | 00MDD91090300 | CERAMIC CAP. | 9PF | CCUS1H9R0JA |
| VIDEO | C115 | | nsp | 00MDD95220300 | CERAMIC CAP. | 22PF 50V | HCUS1H220JA |
| VIDEO | C116 | | nsp | 00MOA10605020 | ELECT CAP. | 10UF 50V | HCEA1HH100T |
| VIDEO | C117 | | nsp | 00MDK96103300 | CERAMIC CAP. | 0.01UF 50V | HCUS1H103KC |
| VIDEO | C118 | | nsp | 00MOA10701620 | ELECT CAP. | 100UF 16V | HCEA1CH101T |
| VIDEO | C119 | | nsp | 00MDK96103300 | CERAMIC CAP. | 0.01UF 50V | HCUS1H103KC |
| VIDEO | C120 | | nsp | 00MDK96103300 | CERAMIC CAP. | 0.01UF 50V | HCUS1H103KC |
| VIDEO | C121 | | nsp | 00MDK96103300 | CERAMIC CAP. | 0.01UF 50V | HCUS1H103KC |
| VIDEO | C122 | | nsp | 00MDK96104300 | CERAMIC CAP. | 0.1UF ZF1608 SIZE | HCUS1E104ZF |
| VIDEO | C123 | | nsp | 00MDK96103300 | CERAMIC CAP. | 0.01UF 50V | HCUS1H103KC |
| VIDEO | C124 | | nsp | 00MOA10701620 | ELECT CAP. | 100UF 16V | HCEA1CH101T |
| VIDEO | C125 | | nsp | 00MDK96103300 | CERAMIC CAP. | 0.01UF 50V | HCUS1H103KC |
| VIDEO | C126 | | nsp | 00MOA10701620 | ELECT CAP. | 100UF 16V | HCEA1CH101T |
| VIDEO | C127 | | nsp | 00MDK96103300 | CERAMIC CAP. | 0.01UF 50V | HCUS1H103KC |
| VIDEO | C128 | | nsp | 00MDK96103300 | CERAMIC CAP. | 0.01UF 50V | HCUS1H103KC |
| VIDEO | C129 | | nsp | 00MDK96103300 | CERAMIC CAP. | 0.01UF 50V | HCUS1H103KC |
| VIDEO | C130 | | nsp | 00MDD91100300 | CERAMIC CAP. | 10PF 50V J | HCUS1H100JA |
| VIDEO | C131 | | nsp | 00MDK96102300 | CERAMIC CAP. | 1000PF 50V | HCUS1H102KB |
| VIDEO | C132 | | nsp | 00MDK96103300 | CERAMIC CAP. | 0.01UF 50V | HCUS1H103KC |
| VIDEO | C133 | | nsp | 00MDD95181300 | CERAMIC CAP. | 180PF 50V | HCUS1H181JA |
| VIDEO | C134 | | nsp | 00MDK96103300 | CERAMIC CAP. | 0.01UF 50V | HCUS1H103KC |
| VIDEO | C135 | | nsp | 00MOA10701620 | ELECT CAP. | 100UF 16V | HCEA1CH101T |
| VIDEO | C136 | | nsp | 00MOA47602520 | ELECT CAP. | 47UF 25V | HCEA1EH470T |
| VIDEO | C137 | | nsp | 00MOA10605020 | ELECT CAP. | 10UF 50V | HCEA1HH100T |
| VIDEO | C138 | | nsp | 00MDD95220300 | CERAMIC CAP. | 22PF 50V | HCUS1H220JA |
| VIDEO | C139 | | nsp | 00MDK96103300 | CERAMIC CAP. | 0.01UF 50V | HCUS1H103KC |
| VIDEO | C140 | | nsp | 00MDD91090300 | CERAMIC CAP. | 9PF | CCUS1H9R0JA |
| VIDEO | C141 | | nsp | 00MDD95220300 | CERAMIC CAP. | 22PF 50V | HCUS1H220JA |

NOTE : “nsp” PARTS IS LISTED FOR REFERENCE ONLY, MARANTZ WILL NOT SUPPLY THESE PARTS.

| P.C.B. NAME | POS. NO. | VERS. COLOR | PART NO. (FOR EUR) | PART NO. (MJI) | PART NAME | DESCRIPTION | |
|---|---|---|---|---|---|---|---|
| VIDEO | C142 | | nsp | 00MDK96104300 | CERAMIC CAP. | 0.1UF ZF1608 SIZE | HCUS1E104ZF |
| VIDEO | C143 | | nsp | 00MDK96103300 | CERAMIC CAP. | 0.01UF 50V | HCUS1H103KC |
| VIDEO | C144 | | nsp | 00MDD95220300 | CERAMIC CAP. | 22PF 50V | HCUS1H220JA |
| VIDEO | C145 | | nsp | 00MDD91090300 | CERAMIC CAP. | 9PF | CCUS1H9R0JA |
| VIDEO | C146 | | nsp | 00MDD95220300 | CERAMIC CAP. | 22PF 50V | HCUS1H220JA |
| VIDEO | C147 | | nsp | 00MDK96104300 | CERAMIC CAP. | 0.1UF ZF1608 SIZE | HCUS1E104ZF |
| VIDEO | C148 | | nsp | 00MOA10605020 | ELECT CAP. | 10UF 50V | HCEA1HH100T |
| VIDEO | C149 | | nsp | 00MOA10701620 | ELECT CAP. | 100UF 16V | HCEA1CH101T |
| VIDEO | C150 | | nsp | 00MDK96103300 | CERAMIC CAP. | 0.01UF 50V | HCUS1H103KC |
| VIDEO | C151 | | nsp | 00MDK96104300 | CERAMIC CAP. | 0.1UF ZF1608 SIZE | HCUS1E104ZF |
| VIDEO | C152 | | nsp | 00MOA10605020 | ELECT CAP. | 10UF 50V | HCEA1HH100T |
| VIDEO | C153 | /N1B | nsp | 00MDD91100300 | CERAMIC CAP. | 10PF 50V J | HCUS1H100JA |
| VIDEO | C153 | /N1G | nsp | 00MDD91100300 | CERAMIC CAP. | 10PF 50V J | HCUS1H100JA |
| VIDEO | C153 | /N1S | nsp | 00MDD91100300 | CERAMIC CAP. | 10PF 50V J | HCUS1H100JA |
| VIDEO | C154 | | nsp | 00MDD91100300 | CERAMIC CAP. | 10PF 50V J | HCUS1H100JA |
| VIDEO | C155 | | nsp | 00MDK98224200 | CERAMIC CAP. | 0.22UF | HCUS1C224ZF |
| VIDEO | C156 | | nsp | 00MDK96222300 | CERAMIC CAP. | 2200PF 50V | HCUS1H222KC |
| VIDEO | C157 | | nsp | 00MDK96103300 | CERAMIC CAP. | 0.01UF 50V | HCUS1H103KC |
| VIDEO | C158 | | nsp | 00MOA22505020 | ELECT CAP. | 2.2UF 50V | HCEA1HH2R2T |
| VIDEO | C159 | | nsp | 00MDK96104300 | CERAMIC CAP. | 0.1UF ZF1608 SIZE | HCUS1E104ZF |
| VIDEO | C160 | | nsp | 00MDK98223300 | CERAMIC CAP. | 0.022UF 50V | HCUS1H223KC |
| VIDEO | C161 | | nsp | 00MOA22505020 | ELECT CAP. | 2.2UF 50V | HCEA1HH2R2T |
| VIDEO | C162 | | nsp | 00MOA47602520 | ELECT CAP. | 47UF 25V | HCEA1EH470T |
| VIDEO | C163 | | nsp | 00MDK96103300 | CERAMIC CAP. | 0.01UF 50V | HCUS1H103KC |
| VIDEO | C164 | | nsp | 00MOA47602520 | ELECT CAP. | 47UF 25V | HCEA1EH470T |
| VIDEO | C165 | | nsp | 00MDK96103300 | CERAMIC CAP. | 0.01UF 50V | HCUS1H103KC |
| VIDEO | C166 | | nsp | 00MDK96104300 | CERAMIC CAP. | 0.1UF ZF1608 SIZE | HCUS1E104ZF |
| VIDEO | C167 | | nsp | 00MDK96104300 | CERAMIC CAP. | 0.1UF ZF1608 SIZE | HCUS1E104ZF |
| VIDEO | C168 | | nsp | 00MDK96104300 | CERAMIC CAP. | 0.1UF ZF1608 SIZE | HCUS1E104ZF |
| VIDEO | C169 | | nsp | 00MDK96104300 | CERAMIC CAP. | 0.1UF ZF1608 SIZE | HCUS1E104ZF |
| VIDEO | C170 | | nsp | 00MDK96104300 | CERAMIC CAP. | 0.1UF ZF1608 SIZE | HCUS1E104ZF |
| VIDEO | C171 | | nsp | 00MDK96104300 | CERAMIC CAP. | 0.1UF ZF1608 SIZE | HCUS1E104ZF |
| VIDEO | C172 | | nsp | 00MDK96104300 | CERAMIC CAP. | 0.1UF ZF1608 SIZE | HCUS1E104ZF |
| VIDEO | C173 | | nsp | 00MDK96103300 | CERAMIC CAP. | 0.01UF 50V | HCUS1H103KC |
| VIDEO | C174 | | nsp | 00MOA10701620 | ELECT CAP. | 100UF 16V | HCEA1CH101T |
| VIDEO | C175 | | nsp | 00MDK96102300 | CERAMIC CAP. | 1000PF 50V | HCUS1H102KB |
| VIDEO | C176 | | nsp | 00MDK96104300 | CERAMIC CAP. | 0.1UF ZF1608 SIZE | HCUS1E104ZF |
| VIDEO | C217 | | nsp | 00MDK96104300 | CERAMIC CAP. | 0.1UF ZF1608 SIZE | HCUS1E104ZF |
| VIDEO | C218 | | nsp | 00MOA47602520 | ELECT CAP. | 47UF 25V | HCEA1EH470T |
| VIDEO | CN71 | | nsp | nsp | JACK | GF102-07S-TS | KJP07GA117ZG |
| VIDEO | IC11 | | 90M-HC108830R | 90M-HC108830R | IC | NJM2285M(TE1) | HVINJM2285MTE1 |
| VIDEO | IC12 | | 90M-HC108840R | 90M-HC108840R | IC | SR7400 | HVITC90A49F |
| VIDEO | IC13 | | 90M-HC108850R | 90M-HC108850R | IC | R59-4174 | HVIMM1511XNRE |
| VIDEO | IC14 | | 90M-HC108810R | 90M-HC108810R | IC | SR7400 | HVITA1270BF |
| VIDEO | IC15 | | 90M-HC900040R | 90M-HC900040R | IC REG | KIA7809AF | HVIKIA7809AF |
| VIDEO | IC16 | | 90M-HC400060R | 90M-HC400060R | IC | TC74HC4094AFN | HVITC74HC4094FN |
| VIDEO | L100 | | nsp | nsp | COIL | 22UH,K | HLQ02C220KT |
| VIDEO | L101 | | nsp | nsp | COIL | 10UH,K | HLQ02C100KT |
| VIDEO | L102 | | nsp | nsp | COIL | 10UH,K | HLQ02C100KT |
| VIDEO | L103 | | nsp | nsp | COIL | 10UH,K | HLQ02C100KT |
| VIDEO | L104 | | nsp | nsp | COIL | 10UH,K | HLQ02C100KT |
| VIDEO | L105 | | nsp | nsp | COIL | 22UH,K | HLQ02C220KT |
| VIDEO | L106 | | nsp | nsp | COIL | 22UH,K | HLQ02C220KT |
| VIDEO | Q100 | | 90M-HT600050R | 90M-HT600050R | TRANSISTOR | TRPNPB-R2 | HVTKTA2014GR |
| VIDEO | Q101 | | 90M-HT600050R | 90M-HT600050R | TRANSISTOR | TRPNPB-R2 | HVTKTA2014GR |
| VIDEO | Q102 | | 90M-HT800110R | 90M-HT800110R | TRANSISTOR | TRNPNB | HVTKTC4075GR |
| VIDEO | Q103 | | 90M-HT600050R | 90M-HT600050R | TRANSISTOR | TRPNPB-R2 | HVTKTA2014GR |
| VIDEO | Q104 | | 90M-HT800110R | 90M-HT800110R | TRANSISTOR | TRNPNB | HVTKTC4075GR |
| VIDEO | Q105 | | 90M-HT600050R | 90M-HT600050R | TRANSISTOR | TRPNPB-R2 | HVTKTA2014GR |
| VIDEO | Q106 | | 90M-HT800110R | 90M-HT800110R | TRANSISTOR | TRNPNB | HVTKTC4075GR |
| VIDEO | Q107 | | 90M-HT600050R | 90M-HT600050R | TRANSISTOR | TRPNPB-R2 | HVTKTA2014GR |
| VIDEO | Q108 | | 90M-HT800110R | 90M-HT800110R | TRANSISTOR | TRNPNB | HVTKTC4075GR |
| VIDEO | Q109 | | 90M-HT600050R | 90M-HT600050R | TRANSISTOR | TRPNPB-R2 | HVTKTA2014GR |
| VIDEO | Q110 | | 90M-HT800110R | 90M-HT800110R | TRANSISTOR | TRNPNB | HVTKTC4075GR |
| VIDEO | Q111 | | 90M-HT600050R | 90M-HT600050R | TRANSISTOR | TRPNPB-R2 | HVTKTA2014GR |
| VIDEO | R100 | | nsp | 00MNN05182610 | RESISTOR | 1.8K OHM | HRJ10DJ182T |
| VIDEO | R101 | | nsp | 00MNN05102610 | RESISTOR | 1608 SIZE | HRJ10DJ102T |
| VIDEO | R102 | | nsp | 00MNN05000610 | RESISTOR | 0 OHM | HRJ10DJ0R0T |

NOTE : “nsp” PARTS IS LISTED FOR REFERENCE ONLY, MARANTZ WILL NOT SUPPLY THESE PARTS.

| P.C.B. NAME | POS. NO. | VERS. COLOR | PART NO. (FOR EUR) | PART NO. (MJI) | PART NAME | DESCRIPTION | |
|---|---|---|---|---|---|---|---|
| VIDEO | R103 | | nsp | 00MNN05102610 | RESISTOR | 1608 SIZE | HRJ10DJ102T |
| VIDEO | R104 | | nsp | 00MNN05182610 | RESISTOR | 1.8K OHM | HRJ10DJ182T |
| VIDEO | R105 | | nsp | 00MNN05102610 | RESISTOR | 1608 SIZE | HRJ10DJ102T |
| VIDEO | R106 | | nsp | 00MNN05000610 | RESISTOR | 0 OHM | HRJ10DJ0R0T |
| VIDEO | R107 | | nsp | 00MNN05102610 | RESISTOR | 1608 SIZE | HRJ10DJ102T |
| VIDEO | R108 | | nsp | 00MNN05105610 | RESISTOR | 1608 SIZE | HRJ10DJ105T |
| VIDEO | R109 | | nsp | 00MNN05105610 | RESISTOR | 1608 SIZE | HRJ10DJ105T |
| VIDEO | R110 | | nsp | 00MNN05105610 | RESISTOR | 1608 SIZE | HRJ10DJ105T |
| VIDEO | R111 | | nsp | 00MNN05105610 | RESISTOR | 1608 SIZE | HRJ10DJ105T |
| VIDEO | R112 | | nsp | 00MNN05224610 | RESISTOR | 220K OHM | HRJ10DJ224T |
| VIDEO | R113 | | nsp | 00MNN05222610 | RESISTOR | 1608 SIZE | HRJ10DJ222T |
| VIDEO | R114 | | nsp | 00MNN05102610 | RESISTOR | 1608 SIZE | HRJ10DJ102T |
| VIDEO | R115 | | nsp | 00MNN05102610 | RESISTOR | 1608 SIZE | HRJ10DJ102T |
| VIDEO | R116 | | nsp | 00MNN05222610 | RESISTOR | 1608 SIZE | HRJ10DJ222T |
| VIDEO | R117 | | nsp | 00MNN05101610 | RESISTOR | 1608 SIZE | HRJ10DJ101T |
| VIDEO | R118 | | nsp | 00MNN05101610 | RESISTOR | 1608 SIZE | HRJ10DJ101T |
| VIDEO | R119 | | nsp | 00MNN05821610 | RESISTOR | 1608 SIZE | HRJ10DJ821T |
| VIDEO | R120 | | nsp | 00MNN05123610 | RESISTOR | 1608 SIZE | HRJ10DJ123T |
| VIDEO | R121 | | nsp | 00MNN05103610 | RESISTOR | 10K OHM | HRJ10DJ103T |
| VIDEO | R122 | | nsp | 00MNN05471610 | RESISTOR | 470 OHM | HRJ10DJ471T |
| VIDEO | R123 | | nsp | 00MNN05471610 | RESISTOR | 470 OHM | HRJ10DJ471T |
| VIDEO | R124 | | nsp | 00MNN05471610 | RESISTOR | 470 OHM | HRJ10DJ471T |
| VIDEO | R125 | | nsp | 00MNN05103610 | RESISTOR | 10K OHM | HRJ10DJ103T |
| VIDEO | R126 | | nsp | 00MNN05102610 | RESISTOR | 1608 SIZE | HRJ10DJ102T |
| VIDEO | R127 | | nsp | 00MNN05102610 | RESISTOR | 1608 SIZE | HRJ10DJ102T |
| VIDEO | R128 | | nsp | 00MNN05471610 | RESISTOR | 470 OHM | HRJ10DJ471T |
| VIDEO | R129 | | nsp | 00MNN05471610 | RESISTOR | 470 OHM | HRJ10DJ471T |
| VIDEO | R130 | | nsp | 00MNN05471610 | RESISTOR | 470 OHM | HRJ10DJ471T |
| VIDEO | R131 | | nsp | 00MNN05103610 | RESISTOR | 10K OHM | HRJ10DJ103T |
| VIDEO | R132 | | nsp | 00MNN05123610 | RESISTOR | 1608 SIZE | HRJ10DJ123T |
| VIDEO | R133 | | nsp | 00MNN05103610 | RESISTOR | 10K OHM | HRJ10DJ103T |
| VIDEO | R134 | | nsp | 00MNN05471610 | RESISTOR | 470 OHM | HRJ10DJ471T |
| VIDEO | R135 | | nsp | 00MNN05471610 | RESISTOR | 470 OHM | HRJ10DJ471T |
| VIDEO | R136 | | nsp | 00MNN05471610 | RESISTOR | 470 OHM | HRJ10DJ471T |
| VIDEO | R137 | | nsp | 00MNN05103610 | RESISTOR | 10K OHM | HRJ10DJ103T |
| VIDEO | R138 | | nsp | 00MNN05102610 | RESISTOR | 1608 SIZE | HRJ10DJ102T |
| VIDEO | R139 | | nsp | 00MNN05102610 | RESISTOR | 1608 SIZE | HRJ10DJ102T |
| VIDEO | R140 | | nsp | 00MNN05471610 | RESISTOR | 470 OHM | HRJ10DJ471T |
| VIDEO | R141 | | nsp | 00MNN05471610 | RESISTOR | 470 OHM | HRJ10DJ471T |
| VIDEO | R142 | | nsp | 00MNN05471610 | RESISTOR | 470 OHM | HRJ10DJ471T |
| VIDEO | R143 | | nsp | 00MNN05103610 | RESISTOR | 10K OHM | HRJ10DJ103T |
| VIDEO | R144 | | nsp | 00MNN05333610 | RESISTOR | 33K OHM | HRJ10DJ333T |
| VIDEO | R145 | | nsp | 00MNN05332610 | RESISTOR | 3.3K OHM | HRJ10DJ332T |
| VIDEO | R146 | | nsp | 00MNN05331610 | RESISTOR | 1608 SIZE | HRJ10DJ331T |
| VIDEO | R147 | | nsp | 00MNN05101610 | RESISTOR | 1608 SIZE | HRJ10DJ101T |
| VIDEO | R148 | | nsp | 00MNN05101610 | RESISTOR | 1608 SIZE | HRJ10DJ101T |
| VIDEO | R149 | | nsp | 00MNN05101610 | RESISTOR | 1608 SIZE | HRJ10DJ101T |
| VIDEO | R200 | | nsp | 00MNN05472610 | RESISTOR | 1608 SIZE | HRJ10DJ472T |
| VIDEO | R201 | | nsp | 00MNN05472610 | RESISTOR | 1608 SIZE | HRJ10DJ472T |
| VIDEO | VR11 | | 90M-RA001080R | 90M-RA001080R | TRIMMING RESIST | RH0638C-471 | HVN1RA471B01T |
| VIDEO | VR12 | | 90M-RA001080R | 90M-RA001080R | TRIMMING RESIST | RH0638C-471 | HVN1RA471B01T |
| VIDEO | X100 | /N1B | 90M-JX001160R | 90M-JX001160R | CRYSTAL | 4.433MHZ | HOX04433E120TF |
| VIDEO | X100 | /N1G | 90M-JX001160R | 90M-JX001160R | CRYSTAL | 4.433MHZ | HOX04433E120TF |
| VIDEO | X100 | /N1S | 90M-JX001160R | 90M-JX001160R | CRYSTAL | 4.433MHZ | HOX04433E120TF |
| VIDEO | X101 | | 90M-JX001150R | 90M-JX001150R | CRYSTAL | 3.579MHZ | HOX03579E120TF |
| VIDEO | X102 | | 90M-FQ000580R | 90M-FQ000580R | SERAMIC VIB. | SR7400 | BVFCSBLA503KECZ |

NOTE : “nsp” PARTS IS LISTED FOR REFERENCE ONLY, MARANTZ WILL NOT SUPPLY THESE PARTS.

***Personal notes:***